THE IDEAL

INSTALLATION & SERVICING MANUAL

Concord

CXS 40 - 120

Installers guide to commercial central heating boilers

spares & parts online
IBASIS.co.uk©

Ideal BOILERS

CAUTION. To avoid the possibility of injury during the installation, servicing or cleaning of this appliance, care should be taken when handling edges of sheet steel components.

CONTENTS

Air Supply. 9

Boiler Assembly - exploded view. 10

Boiler Clearances. 6

Burner Assemblies - exploded views. .....
CXS 40-90. 23
CXS100-120 24

Casing Assembly. 13

Chimney System. 9

Commissioning. 18

Controls. 5

Electrical Connections. 15

Electrical Supply. 9

Fault Finding. 29

Gas Safety Regulations 3

Gas Supply. 9

Hydraulic Resistance. 6

Initial Lighting. 19

Installation. 10

Mandatory Requirements. 8

Option Kits. 5

Pump. 7

Servicing. 21

Short List of Parts. 31

Site Assembled Boilers. 27

Static Head Requirements. 7

System Connections. 12

Ventilation. 9

Water Circulation. 5

Water Connections. 5

Water Treatment. 7

Wiring Diagrams. 16

INTRODUCTION

CONSTRUCTION

BOILER BODY

The sectional boiler body is of cast iron and is supplied assembled on a sheet steel combustion chamber with an integral draught diverter. The boiler can be supplied in sectioned form to special order for site assembly - refer to the section headed 'Instructions for Site Assembled Boilers'.

CASING

The casing is manufactured in stove enamelled sheet steel and is easily assembled on site.

BURNERS

The 3 burners are of stainless steel construction.

Gas Safety (Installation and Use) Regulations, 1994, amendments 1996 or rules in force.

It is the law that **all** gas appliances are installed and serviced by a CORGI registered installer (identified by ❀) in accordance with the above regulations. Failure to install appliances correctly could lead to prosecution. It is in your own interest, and that of safety, to ensure that the law is complied with.

The **Concord CXS 40-120** range of boilers has been tested and certified by British Gas to prEN656 for use with ***Natural gas only.***

Multiple boiler installations

The **Concord CXS range** is certificated for use in multiple boiler installations, providing that the following conditions are satisfied.

1. A downdraught thermostat kit MUST be fitted to ALL boilers in the installation.
2. A maximum of 6 boilers may be used with a single flue header.
3. For clearances see Frame 2.

A comprehensive guide to multiple installations of Concord CXS boilers is available.

WARNING. Failure to use a downdraught kit on every boiler in a multiple boiler installation will negate the certification of the installation and therefore contravene the essential requirements of the Gas Appliance Directive.

Note. *The **CXS 40, CXS 50 and CXS 60** boilers are intended for use as commercial boilers and are NOT certified for use in domestic applications. A domestic installation is defined as an installation where the boiler takes its combustion air from a living space or from a room directly or indirectly connected with the living space. It is important, therefore, that no external control devices - e.g. flue dampers, economisers etc., are directly connected to this appliance unless covered by these Installation and Servicing Instructions or otherwise recommended by* **Caradon Plumbing Limited** *in writing. If in doubt please enquire.*

Any direct connection of a control device not approved by **Caradon Plumbing Limited** *could invalidate the British Gas Certification, the normal appliance warranty and could also infringe the Gas Safety Regulations. Table 1, Table 2 and the descriptive notes which follow contain all the essential data likely to be required by the installer.*

Table 1- Performance Data

Boiler			CXS 40	CXS 50	CXS 60	CXS 70	CXS 80	CXS 90	CXS 100	CXS 110	CXS120
Number of sections			3	4	4	5	5	6	6	6	7
Boiler Input	Gross	kW	31.5	37.5	45.1	52.8	60.4	68.1	75.0	82.1	89.9
Low Rate		Btu/hr x 1000	107.5	128.0	154.0	180.0	206.0	232.4	256.0	280.2	306.7
	Nett	kW	28.4	33.8	40.6	47.5	54.4	61.4	67.6	74.0	81.0
		Btu/hr x 1000	97.0	115.3	138.5	162.5	185.6	209.5	231.7	252.5	276.4
Boiler Input	Gross	kW	52.5	62.5	75.1	87.93	100.7	113.5	125.0	137.4	149.8
		Btu/hr x 1000	179.1	213.3	256.2	300.0	343.6	387.3	426.5	468.8	511.2
High Rate	Nett	kW	47.3	56.3	67.7	79.2	90.7	102.3	112.6	123.8	135.0
		Btu/hr x 1000	161.4	192.1	231.0	270.2	309.5	349.0	385.2	422.4	460.6
Boiler output		kW	42.0	50.0	60.08	70.34	80.56	90.8	100.0	110.0	120.0
High Rate		Btu/hr x 1000	143.3	170.6	205.0	240.0	274.9	309.8	341.2	375.3	409.4
Gas rate		m^3/h	5.0	5.96	7.16	8.38	9.6	10.82	11.91	13.1	14.3
		ft^3/h	176.6	210.5	252.9	295.9	339.0	382.1	420.6	462.3	504.1
Approximate flue gas volume in the secondary flue of the chimney system	4.5% CO_2 &100°C.	m^3/sec	0.044	0.052	0.063	0.073	0.084	0.094	0.104	0.114	0.125
	4.5% CO_2 & 212°F.	$ft.^3m$	93	110	133	155	178	199	220	242	264
Manifold setting pressure		mbar	3.9	3.5	3.9	3.5	3.8	3.6	4.1	4.3	4.5
Low Rate		in.w.g.	1.6	1.4	1.6	1.4	1.5	1.4	1.6	1.7	1.8
Manifold setting pressure		mbar	11.7	10.5	12.2	10.4	10.3	11.2	11.5	11.8	12.0
High Rate		in.w.g.	4.7	4.2	4.9	4.2	4.1	4.5	4.6	4.7	4.8
Seasonal Efficiency (SEDBUK)*			[76.2]%	[76.2]%	[77.7]%	[76.7]%	[77.0]%	[77.3]%	[77.6]%	[77.2]%	[77.4]%

** This value is in the UK government's Standard Assessment Procedure (SAP) for energy rating of dwellings.*
The test data from which it has been calculated has been certified by BGplc 0087.

Note. *To obtain gas consumption, divide gross heat input (kW) by a calorific value of 37.8 (MJ/m³)*
To obtain gas consumption, divide net heat input (kW) by a calorific value of 34.0 (MJ/m³)

Table 2 - General Data

Boiler		CXS 40	CXS 50	CXS 60	CXS 70	CXS 80	CXS 90	CXS100	CXS 110	CXS 120
Number of sections		3	4	4	5	5	6	6	6	7
Flow tappings	Rc (in. BSP)	2 x 2 at rear								
Return tappings	Rc (in. BSP)	2 x 2 at rear								
Maximum static head	metres (feet)	61.0 (200)							45.7 (150)	
Maximum pressure	bar (p.s.i.)	6.0 (87)								
Gas inlet connection	Rc (in. BSP)	3/4 (3/4)					1 (1)			
Min. dynamic gas pressure required at boiler inlet	mbar *gauge*	15.5	15.5	16.5	15.0	16.0	17.5	16.0	17.5	17.5
	in.w.g.	6.2	6.2	6.6	6.0	6.4	7.0	6.4	7.0	7.0
Electricity supply		230 Volts- single phase, 50 Hz, fuse 5 A								
Nominal flue size (to BS. 835)	mm	150	150	175	175	200	200	200	250	250
	in.	6	6	7	7	8	8	8	10	10
Diverter outlet socket internal diameter	mm	184	184	213	213	238	238	238	288	288
	in.	7.3	7.3	8.4	8.4	9.4	9.4	9.4	11.25	11.25
Length of burner bars (overall)	mm	377	497	497	617	617	737	737	737	837
	in	14.8	19.5	19.5	24.3	24.3	29.0	29.0	29.1	33.7
Main burner injectors (3 off)	size, mm	3.4	3.82	4.12	4.57	4.86	5.2	5.3	5.6	5.8
Approximate dry weight	kg	210	265	265	330	330	395	395	395	490
	lb.	463	584	584	727	727	871	871	871	1078
Water content	litre	22	30	30	37	37	45	45	45	53
	gal.	4.8	6.6	6.6	8.2	8.2	9.9	9.9	9.9	11.5

GAS CONTROLS

The boiler lights at Low rate (approximately 60% of Full rate) by direct burner ignition. After about 3 minutes the boiler goes to High rate and will continue at High rate until the thermostat sensor set point is reached. The boiler will then drop to the Low rate; if the temperature continues to rise the boiler will go Off, if the temperature falls the boiler will revert to High rate.

ELECTRICAL CONTROLS

The boiler is supplied with 2 printed circuit boards; Board S4561B1047 is the ignition board containing the flame-proving logic; Board W4115A1020 contains the electronic thermostat and pump overrun timer. A preset overheat thermostat is also provided. The mains voltage supply is via a terminal plug in connection at the control box. The control box displays neons indicating boiler status as follows:

- Boiler on
- Lockout
- Overheat

A 4 minute anti-cycle delay is built in to the controls to prevent rapid cycling.

FROST PROTECTION

Frost protection is incorporated in the boiler as long as there is a permanent Live supply wired to Terminal L1 on the terminal plug-in connection at the control box and the boiler thermostat knob is not switched to Off.

If the temperature sensed by the boiler thermostat falls to about 5^{0}C the boiler will fire until the temperature reaches 18^{0}C.

Note that this is designed to protect the boiler and may not necessarily protect remote parts of the system.

The mains voltage supply is via a terminal plug-in connection at the control box.

OPTION KITS

Remote Indication Kit
This kit gives the facility of remote indication of boiler status.

Pressure Gauge Kit
A pressure gauge kit is available.

Downdraught Thermostat Kit
This kit is optional when used on a single CXS installation, but mandatory when used on a multiple boiler installation.

DUTY

The range of boilers is suitable for: Combined indirect pumped domestic hot water ***and*** central heating systems; Independent indirect pumped domestic hot water ***or*** central heating systems.

Fully pumped systems may be open vented or sealed.

The range of boilers is NOT suitable for:

1. Gravity DHW systems.
2. Gravity heating systems.
3. Direct domestic hot water supply.

WATER CIRCULATION SYSTEM

Due to the compact nature of the boiler the heat stored within the castings at the point of shutdown of the burner must be dissipated into the water circuit in order to avoid the overheat thermostat tripping. In order to allow pump operation after burner shutdown the boiler control box incorporates a pump overrun facility which operates for approximately 6 minutes after the burner shuts down and, in order to make use of this, the pump must be wired to the appropriate terminal L2 (pump) in the boiler control box.

1. The minimum flow rate as given in Table 5 must be maintained whenever the boiler is firing and during the pump overrun period.
2. During the period of pump overrun there must be an open circuit of adequate water volume and/or load. The minimum size of this circuit is given by the use of Graph 1.

   Examples shown on Graph 1

   a. For the **CXS 90** and **CXS 100** the minimum circuit during pump overrun could be a load of 6 kW with a volume of 31 litres or any other combination given by the relevant line.

   b. For the **CXS 70** and **CXS 80** the minimum circuit during pump overrun could be a load of 2 kW with a volume of 45 litres or any other combination given by the relevant line.

   The above circuit capacity during pump overrun may be achieved either by provision of an adequate bypass circuit or by ensuring that a zone of suitable size is open for circulation during this period by relevant control of zone valves or pumps.

   The wiring diagrams in Frames 16,17 &18 illustrate the control methods for achieving the above.

3. Pump selection should take account of the hydraulic resistance given in Graph 2.

1 WATER CONNECTIONS

Flow and return connections are 2" BSP.

A 1" BSP tapping is provided in the redundant return flange for the cold feed or expansion vessel connection.

Safety Valve
A safety valve must be sized and fitted in accordance with BS.6644 for every type of system. The valve should be set at 0.7 bar (10 lb/in.^{2}) above the operating pressure in the boiler. The maximum safety valve setting is 0.7 bar (10 lb/in.^{2}) above the maximum design operating pressure of 6.0 bar (87 lb/in.^{2}).

Cold Feed/Open Vent
The independent cold feed and the open vent must comply with BS. 6644 and be of the following minimum size:

Table 3

Boiler Size	Cold Feed	Open Vent
CXS 40 - 50	3/4"	1"
CXS 60-120	1"	1 1/4"

Sealed system filling point - refer to Frame 8

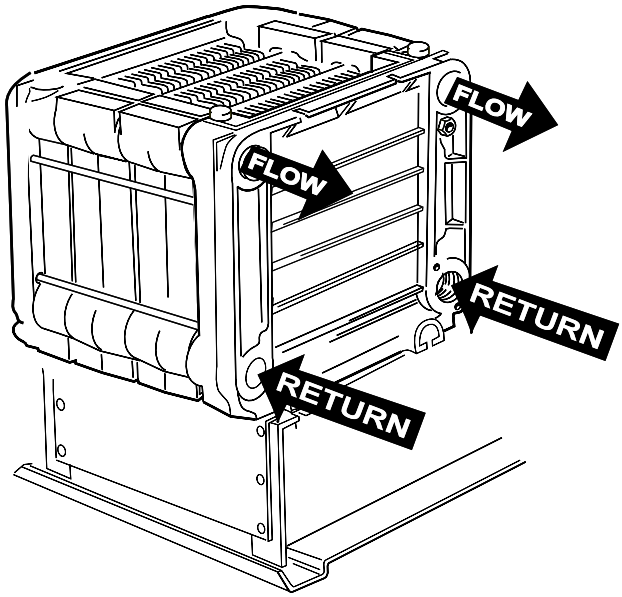

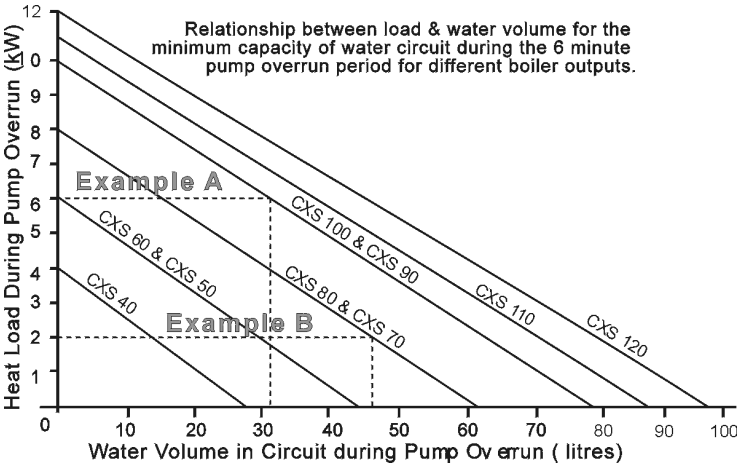

Graph 1 - Heat Load / Water Volume

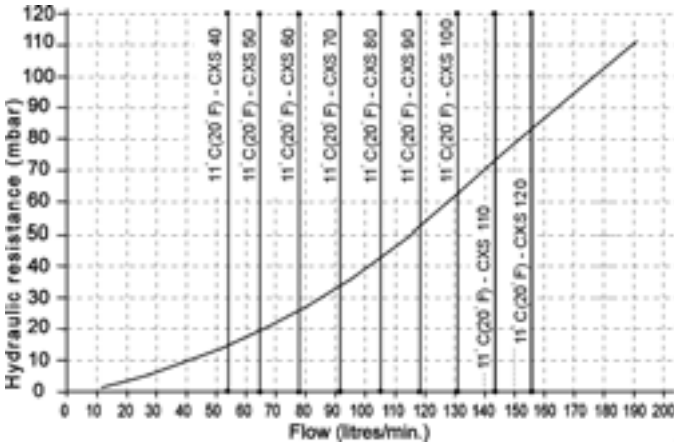

Graph 2 - Hydraulic Resistance

2 CLEARANCES & DIMENSIONS

Table 4

Boiler Size		CXS 40	CXS 50	CXS 60	CXS 70	CXS 80	CXS 90	CXS 100	CXS 100	CXS 120
Front clearance	mm (in)	750 (29 1/2)								
Rear clearance	mm (in)	0	0	0	150 (6)	150 (6)	300 (12)	300 (12)	300 (12)	300 (12)
Side clearance	mm (in)	50 (2)	50 (2)	50 (2)	50 (2)	50 (2)	100 (4)	100 (4)	100 (4)	100 (4)
Dimension **A**	mm	750	882	882	1042	1042	1212	1212	1232	1390
	in	29 1/2	34 3/4	34 3/4	41	41	47 3/4	47 3/4	48 1/2	54 3/4
Dimension **B**	mm	108	108	122.5	122.5	135	190	190	157	160
	in	4 1/4	4 1/4	4 7/8	4 7/8	5 3/8	7 1/2	7 1/2	6 1/8	6 1/4
Dimension **C**	mm	931.6	931.6	931.6	931.6	931.6	893.6	893.6	893.6	893.6
	in	36 5/8	36 5/8	36 5/8	36 5/8	36 5/8	35 3/16	35 3/16	35 3/16	35 3/16
Dimension **D**	mm	177.5	187.5	187.5	224.5	224.5	271.5	271.5	275	321.5
	in	7	7 3/8	7 3/8	8 7/8	8 7/8	10 5/8	10 5/8	10 1/2	12 5/8
Dimension **E**	mm	69.0	79.0	79.0	116.0	116.0	163.0	163.0	167	213
	in	2 3/4	3 1/8	3 1/8	4 5/8	4 5/8	6 1/2	6 1/2	6 5/8	8 3/8

POSITION OF BOILER

Minimum clearances required from walls or other fixed objects to allow for the free access of combustion air are shown in Table 4 above.

However, for maintenance purposes we suggest a minimum rear clearance of 50mm.

Any combustible material adjacent to the boiler and its flue system must be so placed or shielded as to ensure that its temperature does not exceed 65 ^{0}C (150 ^{0}F).

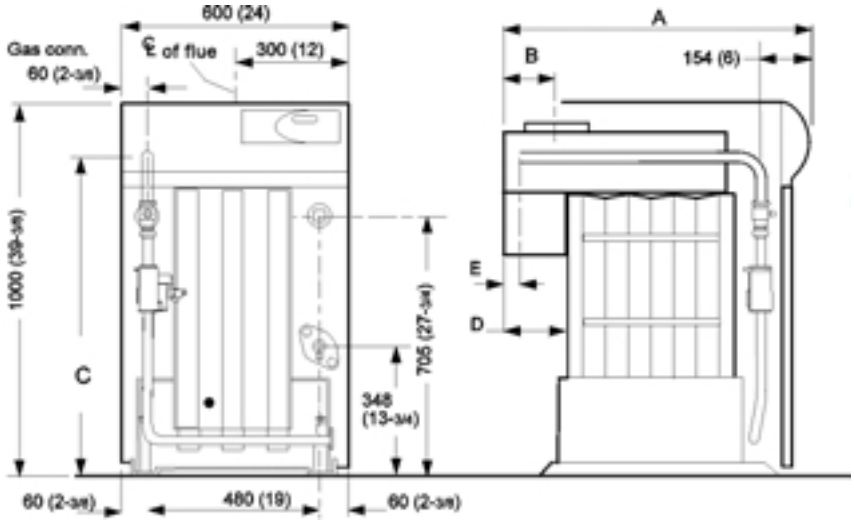

MULTIPLE BOILER INSTALLATIONS

The minimum installation clearances must conform to the dimensions given below:

CXS 40, 50, 60, 70 & 80

Clearance between boilers = 50mm
Clearance at both ends of the multiple installation = 50mm*

CXS 90,100, 110 & 120

Clearance between boilers = 100mm

Clearance at both ends of the multiple installation = 100mm*

Rear clearance: sufficient clearance should be given at the rear of the boiler for connection of gas and water pipework.

*Additional clearance is required for access at either end of the installation.

PUMP POSITIONS

Whenever practically possible the circulating pump(s) should be positioned so that it pressurises the system being served. The vertical distance between the pump(s) and any cold feed and expansion cistern MUST comply with the pump manufacturers requirements in order to avoid cavitation. These requirements override the information given in Frame 3 if the static head required for the pump(s) exceeds that required for the boiler.

Table 5 - Flow rates for fully pumped systems

Boiler	Minimum flow rates for a temperature difference of 35 °C (63 °F)	
	l/s	g.p.m.
CXS 40	0.28	3.7
CXS 50	0.34	4.5
CXS 60	0.41	5.4
CXS 70	0.48	6.3
CXS 80	0.55	7.3
CXS 90	0.62	8.2
CXS 100	0.68	9
CXS 110	0.75	9.9
CXS 120	0.82	10.9

MINIMUM FLOW OF WATER - Refer to Table 5

The system design must provide for an adequate flow rate through the boiler at all times when the boiler is firing. The minimum flow rate should correspond to a temperature difference across the boiler flow and return of 35°C (63°F), assessed at catalogue rating.

WATER TREATMENT FOR HOT WATER AND HEATING BOILERS

There is a basic need to treat the water contained in all heating and indirect water systems, particularly open vented systems. It is assumed, incorrectly, that because boilers are operating in conjunction with what is apparently a closed circuit an open vented system will not, under normal circumstances, allow damage or loss of efficiency due to hardness salts and corrosion once the initial charge of water has been heated up a few times.

1mm of lime reduces the heat transfer from metal to water by 10%.

In practice the deposition of these salts is liable to cause noises from the boiler body or even premature boiler failure. Corrosion and the formation of black iron oxide sludge will ultimately result in premature radiator failure.

Open vented systems are not completely sealed from the atmosphere if proper venting and expansion of system water is to be achieved. The same tank is used to fill the system with water and it is through the cold feed pipe that system water expands into the tank when the boiler passes heat into the system. Conversely, when the system cools, water previously expelled is drawn back from the tank into the system together with a quantity of dissolved oxygen.

3 OPEN VENTED SYSTEMS - Minimum static head requirements

Particular reference should be made to BS. 6644: Section 2; Subsection 10 and Guidance note PM5 "Automatically controlled steam and hot water boilers" published by the Health and Safety Executive.

The information and guidance given below is not intended to override any requirements of either of the above publications or the requirements of the local authority, gas or water undertakings.

Other British Standards applicable are BS.5422 & BS.6700.

The information provided is based on the following assumptions:

1. An independent open vent/safety pipe connection is made to the redundant boiler flow tapping or is positioned immediately after the system flow pipe connection to the header, as shown.
2. An independent cold feed/expansion pipe connection is made to the redundant boiler return tapping. Cold feed/expansion pipe connections made to the pumped system return will result in an increase in the static head requirement, caused by the additional resistance of the distributor tube. Surging may also increase.
3. The maximum flow rate through the boiler is based on a temperature difference of 11°C at full boiler output and the circulating pump is positioned in the flow to the system.
4. The boiler is at the highest point of circulation in the system. Systems designed to rise above the boiler flow tappings will automatically require a minimum static head higher than that shown.
5. The position of the open vent/safety pipe above the expansion cistern water level is given as a guide only. The final position will depend upon the particular characteristics of the system. Pumping over of water into the expansion cistern must be avoided.

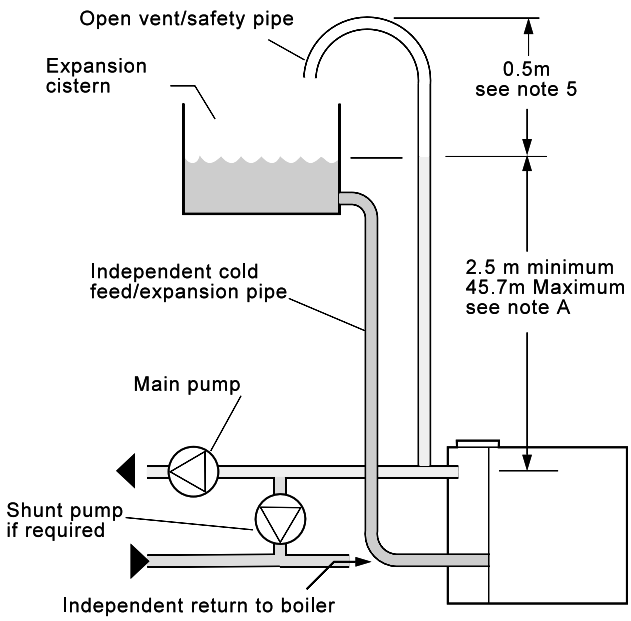

Note A.

This minimum height must be increased, if necessary, to comply with the minimum head required by the pump manufacturer in order to avoid cavitation.

Note B.

This diagram does not show safety valves, water flow switches, etc., necessary for the safe operation of the system.

Even if leakage from the heating and hot water system is eliminated there will be evaporation losses from the surface of the tank which, depending upon ambient temperature, may be high enough to evaporate a large portion of the system water capacity over a full heating season.

There will always be corrosion within a heating or hot water system to a greater or lesser degree, irrespective of water characteristics, unless the initial fill water from the mains is treated. Even the water in closed systems will promote corrosion unless treated. For the reason stated, **Caradon Plumbing Limited** strongly recommend that when necessary the system is thoroughly cleaned, prior to the use of stable inhibitor, which does not require continual topping up to combat the effects of hardness salts and corrosion on the heat exchangers of the boiler and associated systems.

Caradon Plumbing Limited advise contact directly with specialists on water treatment such as:

Fernox Manufacturing Co. Ltd., or Sentinel Division,
Tandem House, Betz Dearborn Ltd.,
Marlowe Way, Widnes,
Croydon, Cheshire, WA8 8UD
Surrey, CRO 4XS Tel. 0151 424 5351
Tel. 0870 560 15000

INSTALLATION REQUIREMENTS

The appliance must be installed by a CORGI registered installer, identified by ❀.

The installation of the boiler must be in accordance with the relevant requirements of the Gas Safety Regulations, current I.E.E. (BS. 7671) Regulations, Model Water Bye-laws, local water authority bye-laws and it should also comply with any relevant requirements of the local gas supplier, local authority and the relevant British Standard Codes of practice and building regulations.

These appliances are NOT suitable for installation where they will be exposed to the elements. A boiler room shall be constructed or adapted to meet the requirements of BS 6644. The maximum ambient temperature is 32 ^{0}C at 1.5 metres from the floor with a maximum humidity of 90% RH.

FOR SMALL PIPE INSTALLATIONS;
BS. 6891: Installation of low pressure pipework

FOR LARGE PIPE INSTALLATIONS:

British Gas Publications:

IGE-UP-1: Purging Procedures of Non-domestic Gas Installations. Soundness Testing Procedures for Industrial and Commercial .

IM11: Flues for Commercial and Industrial Gas Fired Boilers and Air Heaters.

Gas Installations

IGE-UP-2: Guidance notes on the Installation of Gas Pipework, Boosters and Compressors in Customer's Premises Equal to or Greater than 25mm (Non-domestic).

BS.6644: Installation of Gas Fired Hot Water Boilers 60kW to 2MW.

BS 6880 Pt1-3: Water Supply.

CP342:2: Centralised Hot Water Supply.

Model Water Bye-laws.

Manufacturers notes must not be taken, in any way, as overriding statutory obligations.

The appliance must be installed in a room separated from living rooms and provided with appropriate ventilation direct to the outside - see Table 6.

FOUNDATION

The boiler must stand on a non-combustible floor (i.e. concrete or brick) which must be flat, level and of a suitable load bearing capacity to support the weight of the boiler (when filled with water) and any ancillary equipment.

If the boiler is mounted on a plinth then the dimensions must exceed the plan area of the boiler by at least 75mm on each side.

4 SEALED (PRESSURISED) SYSTEMS

Working pressure 6.0 bar maximum.

Particular reference should be made to BS. 6644: Section 2; Subsection 11 and Guidance note PM5 "Automatically controlled steam and hot water boilers" published by the Health and Safety Executive.

The information and guidance given below is not intended to override any requirements of either of the above publications or the requirements of the Local Authority, gas or water undertakings.

In general commercial closed pressurised systems are provided with either manual or automatic water make up.

On both instances it will be necessary to fit automatic controls intended to protect the boiler, circulating system and ancillary equipment by shutting down the boiler plant if a potentially hazardous situation should arise.

Examples of such situations are low water level and operating pressure or excessive pressure within the system. Depending on circumstances, controls will need to be either manual or automatic reset. In the event of shutdown both visual and audible alarms may be necessary.

Pressure vessels used must comply with BS. 4814 and must be sized on the basis of the total system volume and initial charge pressure.

Initial minimum charge pressure should not be less than 0.5 bar (7.2 psi) and must take account of static head and specification of the pressurising equipment. The maximum water temperatures permissible at the point of minimum pressure in the system are specified in Guidance Note PM5.

When make up water is not provided automatically it will be necessary to fit controls which shut down the plant in the event of the maximum system pressure approaching to within 0.35 bar (5 psi) of safety valve setting.

Other British Standards applicable to commercial sealed systems are:-

BS. 6880: Part 2.
BS. 1212
BS. 6281: Part 1
BS. 6282: Part 1
BS. 6283: Part 4

VENTILATION

Safe, efficient and trouble-free operation of open flued gas boilers is vitally dependent on the provision of an adequate supply of fresh air to the room in which the appliance is installed. Ventilation by grilles communicating to the outside air is required. The minimum free area of these grilles must be in accordance with Tables 6 and 7.

Table 6 - CXS 40-60 boilers installed in a room or internal space

Boiler size	Air vent free area cm^2
40	202
50	247
60	304

This air vent shall be direct to outside air or to a room or internal space itself with an air vent to outside air of the same size.

Table 7 - CXS 70-120 boilers

Total input rating of boilers	Position of air vents	Air vent areas (air direct from outside)
Up to 2 MW	HIGH LEVEL	270 cm^2 plus 2.25 cm^2 per kW in excess of 60 kW total rated input
Up to 2 MW	LOW LEVEL	540 cm^2 plus 4.5 cm^2 per kW in excess of 60 kW total rated input

Position ventilation grilles to avoid the risk of accidental obstruction by blockage or flooding. If further guidance on ventilation is required then consult BS.6644 and BS.5440:2;2000

AIR SUPPLY BY MECHANICAL VENTILATION

The supply of air by mechanical means to a space housing the boiler should be by mechanical inlet with natural or mechanical extraction. Mechanical extract ventilation with natural inlet must not be used.

Where a mechanical inlet and a mechanical extract system is applied, the design ventilation flow rates should be as in Table 4 of BS.6644.

The requirements for air supply by mechanical ventilation are given in BS.6644.

Note. *For mechanical ventilation systems an automatic control should be provided to cause safety shutdown or lockout of the boiler(s) in the event of failure of air flow in either inlet or extract fans.*

IMPORTANT. The use of an extractor fan in the same room as the boiler (or in an adjacent, communicating room) can, in certain conditions, adversely affect the safe operation of the boiler. Where such a fan is already fitted (or if it is intended to fit an extractor fan after installation of the appliance) the advice of the gas supplier should be obtained.

Tests for spillage of products from the draught diverter when the extractor fan is running and all doors and windows are shut should be carried out after installation, If spillage is detected, the area of permanent ventilation must be increased.

CHIMNEY SYSTEM

To ensure the safe and satisfactory operation of the boiler then the chimney system (which may be common or individual, in the case of twin or multiple boiler installations) must be capable of the complete evacuation of combustion products at all times. The effective height of the chimney terminal(s) above the boiler outlet(s) must ensure sufficient buoyancy to overcome the resistance of the bends, tees and runs of the flue pipe involved and shall terminate in a down draught free zone. The number of bends and lengths of horizontal flue pipe used should be kept to a minimum in order to reduce gas flow resistance.

Compliance with the recommendations made in BS.6644; British Gas publication IM 11 'Flues for Commercial and Industrial Gas Fired Boilers and Air Heaters' and the' Third Edition of the 1956 Clean Air Act Memorandum' should be strictly observed where applicable.

The chimney design should avoid the formation of excessive quantities of condensate. For this reason it is recommended that all chimneys are insulated and lined. In the case of brick or similar structures a stainless steel rigid or flexible flue liner (grade 304/316) may be used in conjunction with a 50 mm (minimum) thick layer of vemiculite or perlite granules between the liner and the inner skin of the chimney body. Liners should be sealed at both top and bottom.

As the **Concord CXS** range of boilers is supplied complete with an integral draught diverter, a diverter MUST NOT be fitted within the chimney system.

Drainage points positioned at the bottom of all vertical chimney sections should be provided. Drain pipes should be no less than 25 mm I.D., manufactured from acid condensate resistant material such as stainless steel and be positioned so that pipe runs and discharge points are not subject to the effects of frost and that flue gases cannot leak into the boiler room.

Care should be taken to ensure the specification of the chimney is suitable for the application by reference to the manufacturers literature. **Caradon Plumbing Limited** can offer advice on the design of suitable chimney systems.

GAS SUPPLY

If there is any doubt regarding the capacity of the gas meter, the available gas pressure, the adequacy of existing service pipes or the size required for new service pipes then the advice of the gas supplier should be requested.

Installation pipework should be fitted and tested for gas soundness in accordance with BS. 689:1 IGE-UP-1 for small installations and IGE-UP-2 for large installations.

The local gas supplier must be consulted if it is necessary to employ a gas pressure booster.

ELECTRICAL SUPPLY

WARNING. This appliance must be efficiently earthed.

A 230 V - 50 Hz mains supply is required, fused at 5 amps.

Wiring external to the appliance MUST be in accordance with the I.E.E. (BS. 7671) Wiring Regulations and any local regulations which apply.

For details of connections see Frame 14.

5 CONCORD CXS BOILER ASSEMBLY - Exploded view

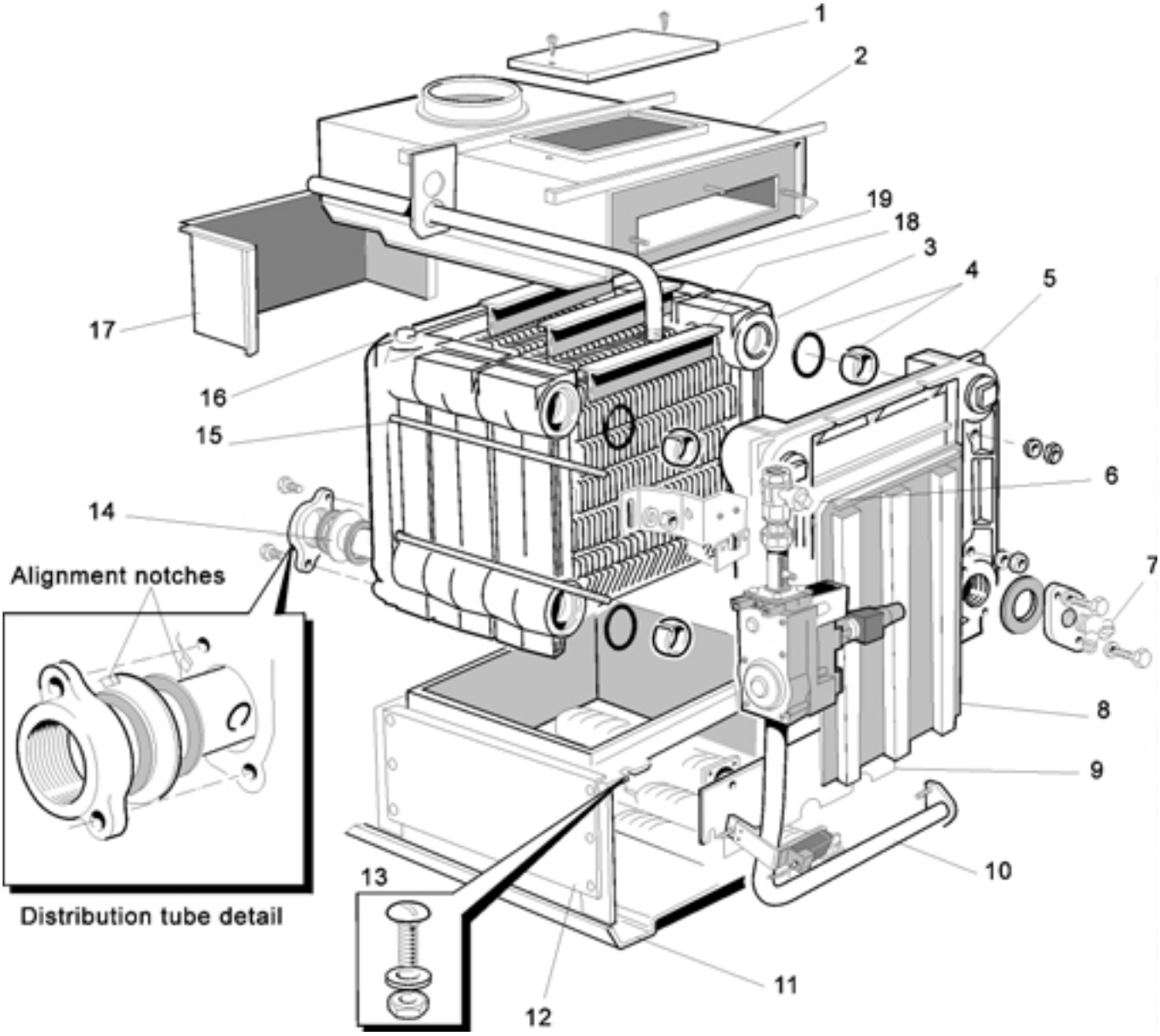

Legend

1. Cleanout cover
2. Collector hood
3. Middle section
4. Section alignment rings & 'O' rings
5. End section
6. Gas cock
7. Drain cock
8. NOx duct
9. Front plate
10. Burner manifold assy.
11. Base plate
12. Combustion chamber
13. Section bolt
14. Distribution tube
15. Tie rods
16. Thermostat pocket
17. Spillage skirt
18. Flueway baffles
19. Gas pipe

6 PACKAGING

Check that all these packages are complete and have been correctly received on site.

Factory assembled boilers are despatched from the works as fully packaged units comprising:

1. Assembled boiler body (with distributor tube) on a wooden pallet base enclosed in a wooden crate.
2. Carton containing the casing, fastenings and flue brush.
3. Carton containing the installation pack.
4. Carton containing the control box and instruction books.

CASING PACK contains

- Front panel ..... 1 off
- Side panel ..... 2 off
- Top panel ..... 1 off
- Flue brush ..... 1 off
- Casing hardware pack ..... 1 off

INSTALLATION HARDWARE PACK contains

- M10 washer ..... 4 off
- Split pin ..... 1 off
- Strain relief bush ..... 1 off
- M10 x 25 Hex. Hd. screw ..... 2 off
- M10 x 35 Hex. Hd. screw ..... 2 off
- Gasket EPDM Type EP600 ..... 3 off
- Plug 2" taper Sq. Hd ..... 3 off
- Flange RC 1" ..... 1 off
- 2" BSP Flange (distributor tube) ..... 1 off
- 2" Installation pipe (handling bars) .... 2 off
- Thermostat pockets ..... 2 off

7 PACKAGING AND BOILER REMOVAL

1. Remove the casing carton and outer packaging frame.
2. Remove the casing pack support frame.
3. Remove the distributor tube pack, controls package and installation pack.
4. Remove the 2" BSP steel handling bars from installation pack.
5. Remove 4 base bolts holding assembly to the packaging base.
6. Remove the wood screws securing the front cross member on the packaging base.
7. Remove the gas cock by unscrewing the union and screw in the handling bars into the 2 front tappings. Protect the exposed inlet gas union from ingress of dirt.
8. Knock out front spacing blocks from the packaging base, ensuring that the boiler assembly is supported, using 2" BSP handling bars.
9. Using the handling bars, manoeuvre the boiler forward on the packaging base and slide it over collapsing base on to the floor.

   Note. *Before manoeuvring the boiler into its final position see Frame* 8

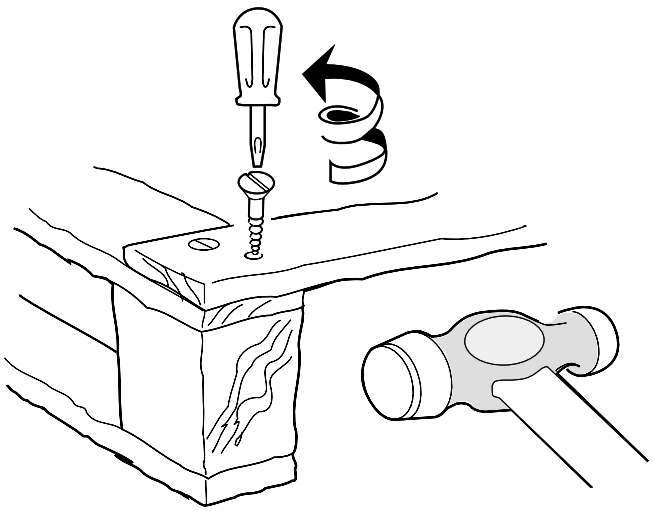

8 BOILER ASSEMBLY

1. Fit the distributor tube (supplied with the boiler) into one of the return connections. That is one of the rear lower ports. Refer to Frame 5.

Fit the flange using the M10 x 35mm screws and washers provided.

Ensure that the tube flange aligns horizontally and that the 2 sealing gaskets are correctly assembled on the tube. Refer to alignment notches in Frame 5.

2. Fit the 1" tapped flange to the other lower rear connection using the gasket and M10 x 25mm screws and washers provided.

3. Temporarily screw the 2 handling bars (2" pipe) into the top tappings and manoeuvre the boiler into position.

4. Complete the system connections, using suitable jointing compound, as follows:

a. The flow connection may be made to either of the rear top tappings (either at the same side as the return or opposite the return).
To avoid air locks, any reduction in pipe size must be made in the vertical plane or achieved by using eccentric bushes.

b. The 1" tapping in the redundant return flange may be used for the cold feed on an open system or connection of a pressure vessel if on a sealed system.
If not required for this purpose it should be plugged.

c. Fit the 2 thermostat pockets. Refer to Frame 9.

Note. *Frame 9 shows the relationship between the overheat thermostat and the flow tapping.*

d. Complete the water connections by plugging the 2 front top tappings with the 2" BSP plugs provided.

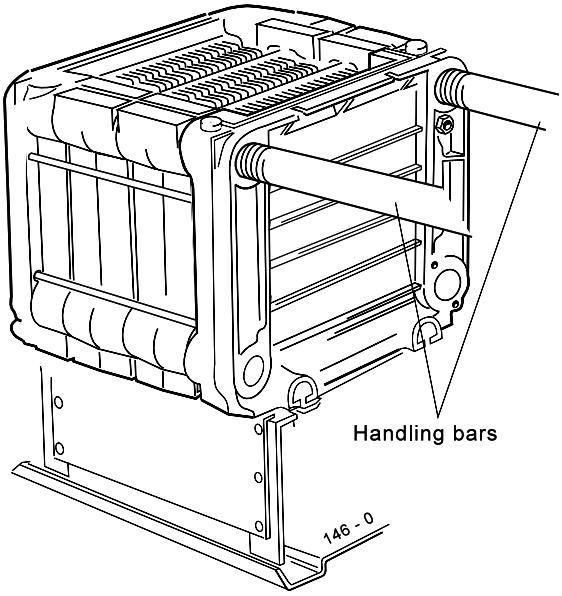

9 SYSTEM CONNECTIONS

One flow and return connection should be made to the rear of the boiler - either on one side or opposite sides.

The distributor tube and gaskets, supplied with the boiler, must be connected into the pumped return connection. Refer to Frame 8.

2 thermostat pockets are supplied in the installation pack. These must be fitted in the 2 top 1/2" BSP tappings at either side of the rear of the heat exchanger.

Position the overheat thermostat phial into the thermostat pocket at the opposite side to the flow pipe. The illustrations below show the rear of the boiler with the flow and relative overheat thermostat positions.

Ensure that the overheat thermostat phial and control sensor are correctly secured in the pockets. Refer to Frame 13.

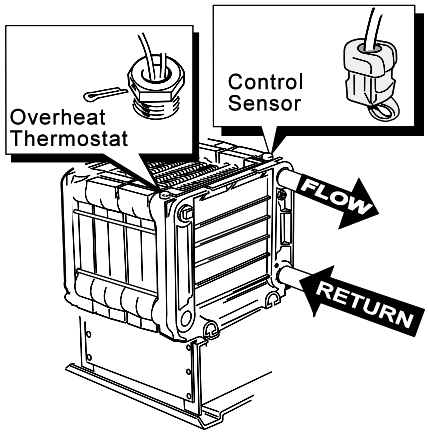

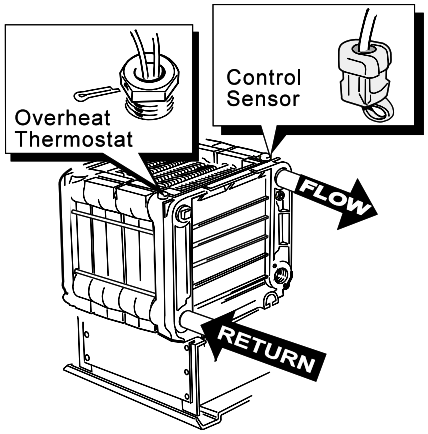

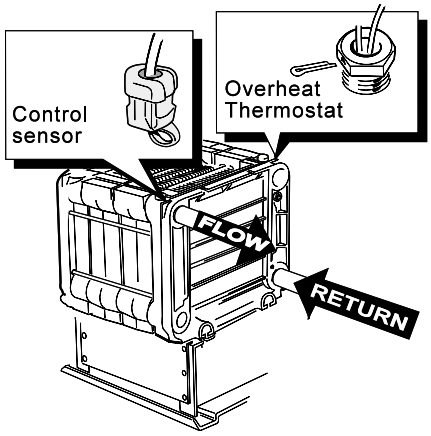

10 FLUE CONNECTION

1. Complete the flue connection.
2. The boiler is designed to accept flues to BS. 835 and should be sealed with an approved boiler putty.

11 GAS CONNECTION

1. Connect the gas supply to the gas inlet pipe at the rear LH side of the boiler.
2. Table 2 gives details of the inlet connection size and the minimum working pressures.

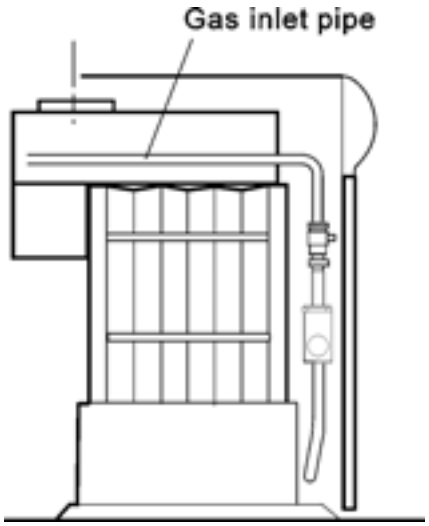

12 CASING ASSEMBLY

1. Unpack the control box from its carton and release the temperature sensing probe strapped to the back of the box.

   The boiler casing should now be fitted.

   A casing hardware pack contains all the screws required for assembly.
2. Slide bottom of the side panel on to the studs on the base tray.
3. Screw the side panel to the support angle. Repeat for other side.

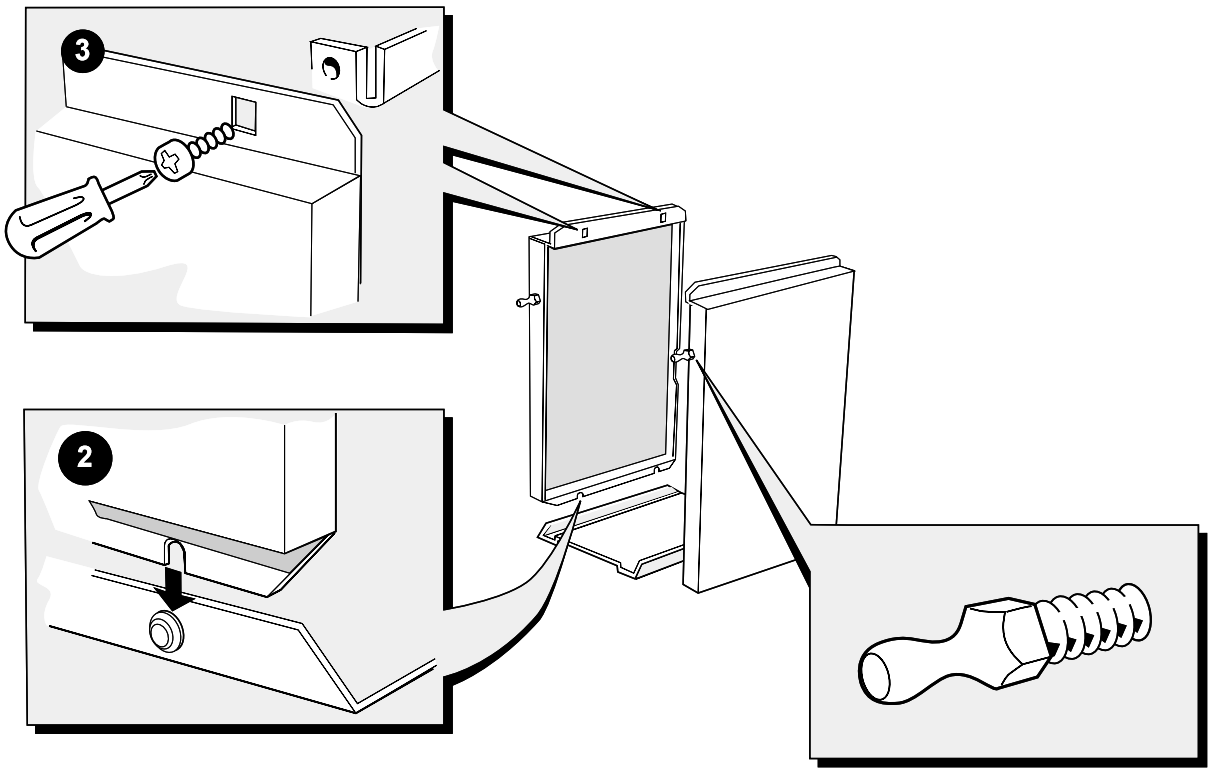

13 CASING ASSEMBLY - continued

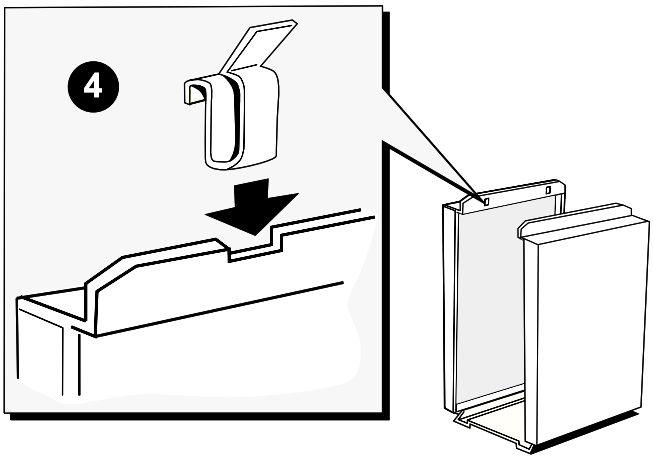

4. Fit 3 clips to the top of each side panel.
5. Fit the spire clips to the side casing panels.
6. Hook on the control box to side panels.
   Screw in self tapping screws at the bottom of the control box to fix it to the side panels.

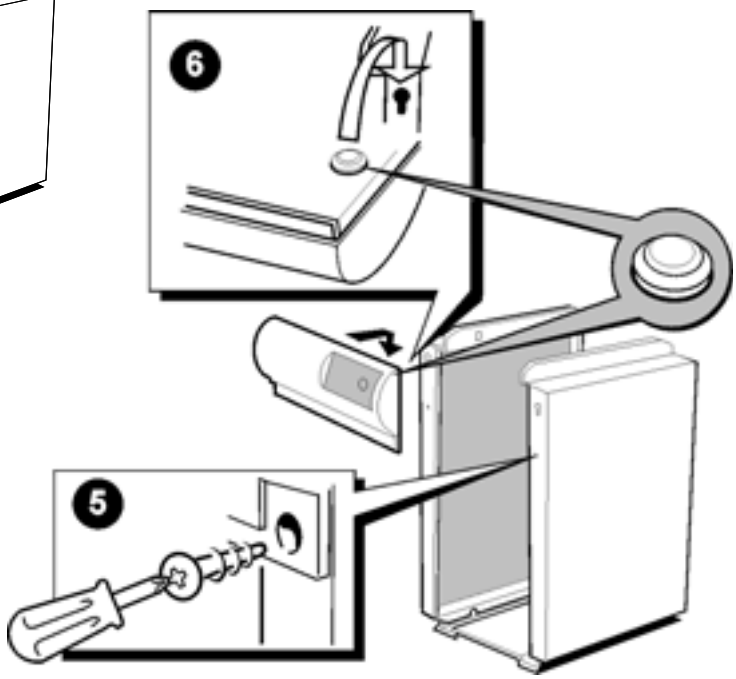

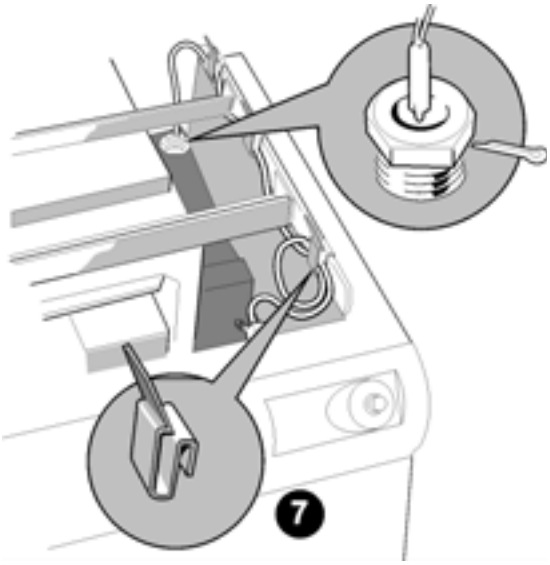

7. Route the thermostat capillary through the cable clips as shown.
   Ensure the phial is correctly seated in the correct pocket opposite side to the flow connection. Refer to Frame 9.
   Secure with the split pin provided.

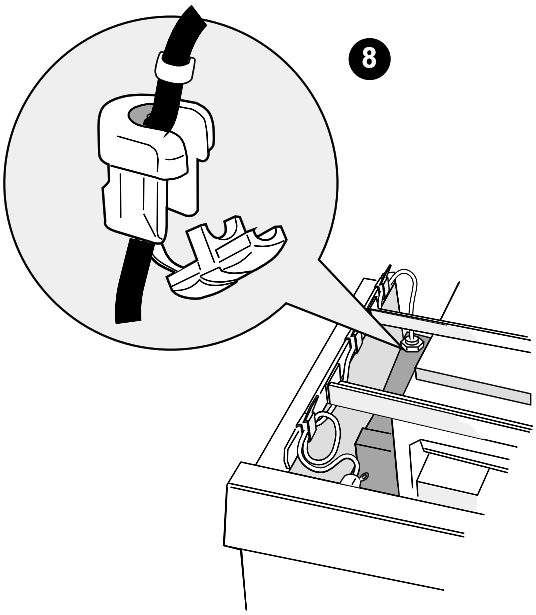

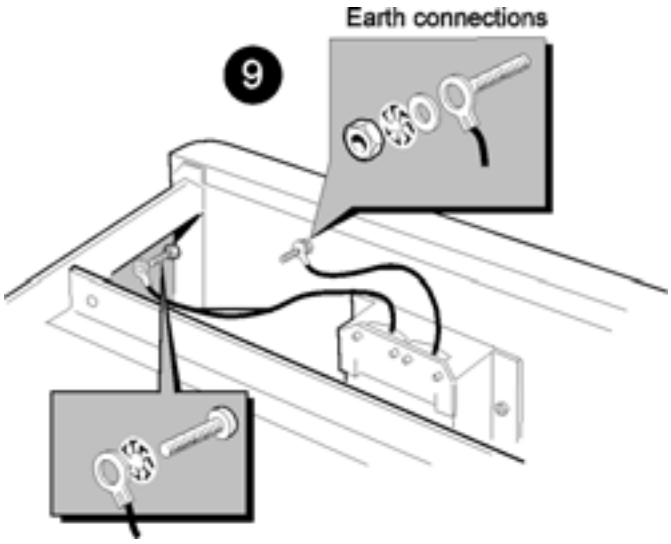

8. Route the temperature sensing probe through the cable clips provided and into the thermostat pocket adjacent to the flow connection.
   Fit the plastic Heyco bush over the sensor lead at the line shown and insert it into the thermostat pocket.
   Ensure that the Heyco bush is correctly located.
9. Fit earth leads as shown

14 ELECTRICAL CONNECTIONS

Connection must be made in a way that allows complete isolation of the electrical supply - such as a double pole switch, having a 3mm (1/8") contact separation in both poles, or a plug and socket serving only the boiler and system controls. The means of isolation must be accessible to the user after installation.

This should serve only the boiler, together with its controls and pumps. The unswitched live supply, which the boiler requires to allow the pump overrun facility to operate, should be controlled by the above switched/fused supply, but should connect from there directly to the boiler and not via any automatic time or temperature controls.

The switched live supply should be subject to control by time and temperature controls in the usual way.

The controls incorporate a pump overrun facility, which is necessary to dissipate residual heat on plant shutdown. It is essential therefore that the main pump (and shunt pump if fitted) is wired to the pump terminals marked L2, N and Earth on the plug-in terminal strip on the top box at the rear of the control box.

The main supply to the boiler must be wired to the boiler terminals L1, N and Earth on the plug-in terminal strip. This live connection must be unswitched, that is a supply not interrupted by any automatic temperature or time control, to enable the pump overrun (and the frost protection facility) to operate.

Failure to operate this procedure will result in nuisance overheat thermostat operation.

If a down draught flue thermostat is to be fitted then the link (marked TTB) should be removed from the plug-in connector.

The internal wiring of the boiler control box is shown in Frame 15.

Wiring should be in four core PVC insulated cable, not less than 0.75mm^2 (24/0.2mm). All fuses must be ASTA approved to BS. 1362.

The length of the conductor between the cord anchorage and the terminals must be such that the current carrying conductors become taut before the earthing conductor, if the cable or cord slips out of the cord anchorage.

The boiler can be controlled either by volt-free external contacts connected between terminals X1 and X2 or by a switched live supply brought to X2 (after removal of the factory-fitted link between X1 and X2), accompanied in each case by a permanent live supply to terminal L1.

If a separate frost thermostat is fitted it must be wired across the time switch contacts and if frost is likely the system should be turned off using the time switch settings - all other controls including the boiler thermostat knob should be in the normal running position.

The earth connection MUST NEVER be omitted.

Wire the earths as shown in Frame 13.

All wiring between entry at the rear of the boiler and the connection box must be secured neatly under the cable clips provided.

Wiring must never be allowed to come into contact with the hot boiler body.

If a flow switch is fitted, it should be wired between F_1 and F_2 or the terminal plug-in connection on the bottom box at the rear of the control box.

Do not wire these connections in conduit up to the boiler as this will make it impossible to remove the control box for servicing or maintenance.

14A ELECTRICAL CONNECTIONS

Remove the 2 screws from the box at the bottom of the control box back panel and push in the terminal plug-in connector containing the gas valve wiring harnesses. Secure with the 2 screws.

Fit the earth terminals to the earth post at the LH side of the control box back panel.

Check that the flame detector lead is properly connected to the flame detector electrode on the RH burner.

15 INTERNAL WIRING

LEGEND

b blue	**br** brown	**y** yellow	**y/g** yellow/green	**v** violet
bk black	**r** red	**w** white	**or** orange	**pk** pink

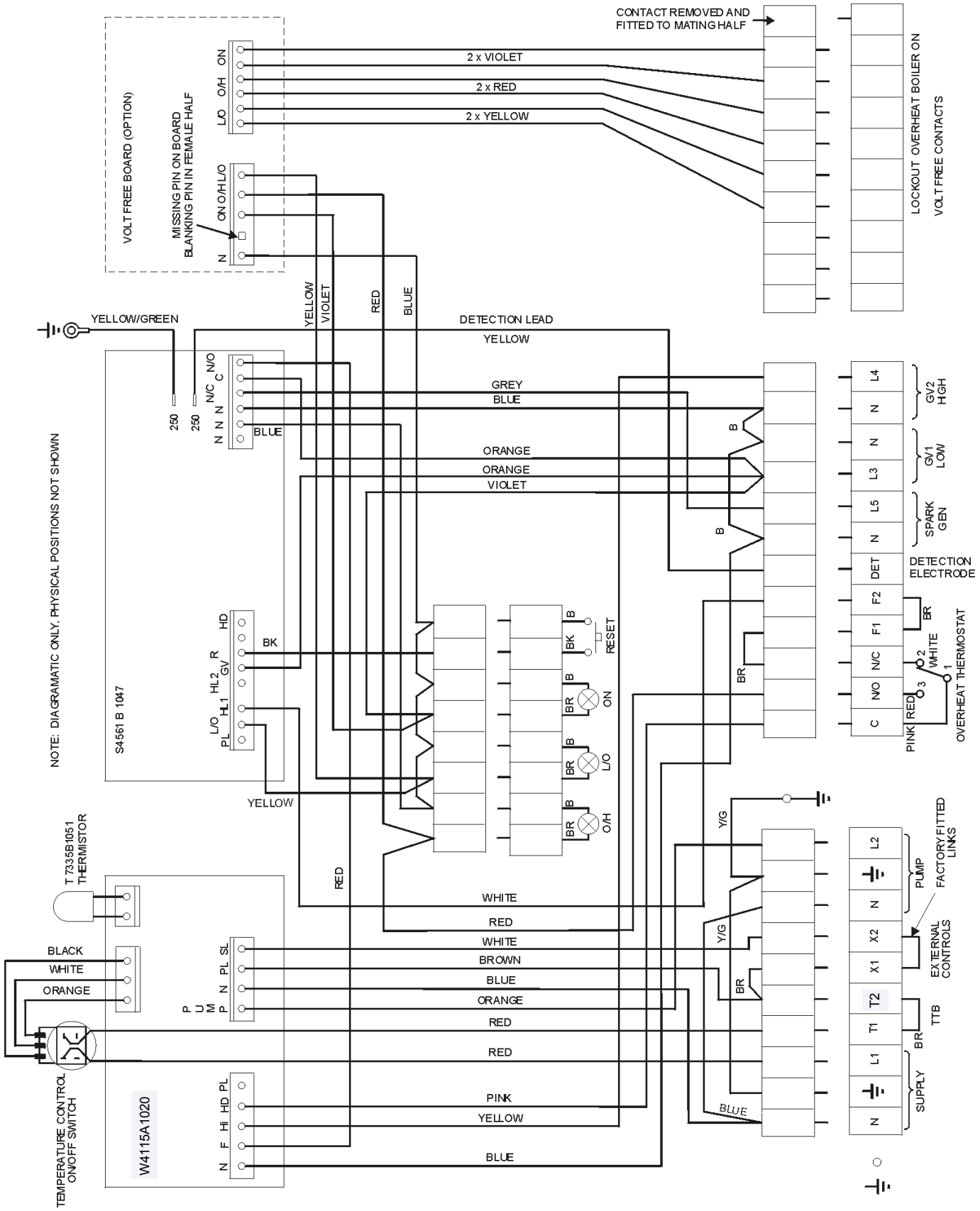

16 ZONES WITH BI-DIRECTIONAL MOTORISED VALVES

Schematic Wiring

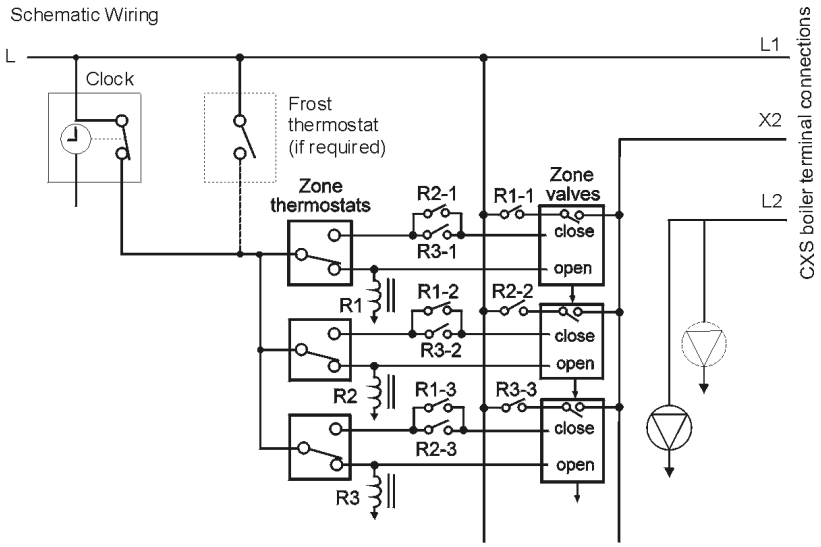

NB. Contacts shown at room temperature with power off

IMPORTANT

Terminal L2 may control the appropriate pump(s) directly, provided that the total running or starting current does not exceed 6A (resistive or inductive): if this rating would be exceeded, then appropriate switchgear must be used to control the pumps indirectly.

Three zones are illustrated but the principles may be extended as required, provided the above conditions are met. Each relay will then require as many contacts as there are zones.

Overrun

Since any zone may be the load during overrun, all zones MUST individually be able to satisfy the conditions in the foregoing paragraph. If not all zones can do this then consider other means of control, detailed on other sheets.

Normal operation

When any thermostat is satisfied while others are calling for heat, power is available via relay contacts to close the valve for that zone. When all thermostats are satisfied (also when the clock period ends) all relays will be off, so the zone valves which were open will remain open for the pump overrun period.

Pipework

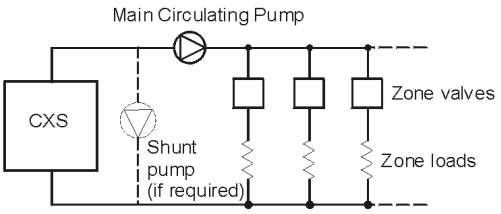

At the start of the next call for heat (or the next clock period) valves on zones not calling for heat will motor shut.

Water circulation system - refer to page 5

17 ZONES WITH INDIVIDUALLY PUMPED ZONES (3 zones shown)

Schematic Wiring

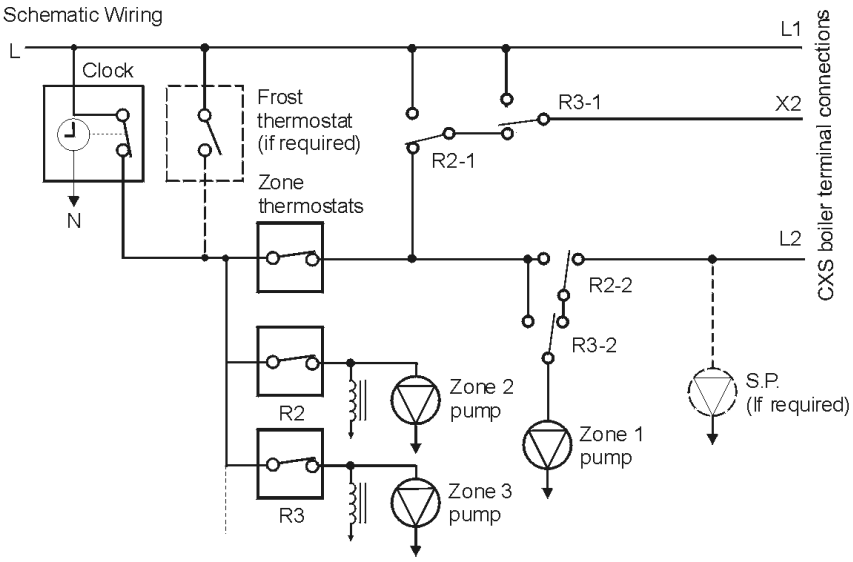

NB. Contacts shown at room temperature with power off

Pipework

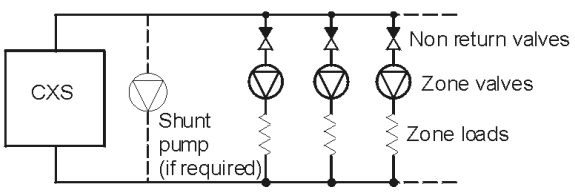

IMPORTANT

Terminal L2 may control the appropriate pump(s) directly, provided that the total running or starting current does not exceed 6A (resistive or inductive): if this rating would be exceeded then appropriate switchgear must be used to control the pumps indirectly.

Three zones are illustrated but the principles may be extended as required, provided the above conditions are met. For each zone (except Zone 1) a relay with 2 C/O contacts is required.

Overrun

During overrun periods, Zone 1 pump performs the overrun facility; this zone, therefore, must satisfy the conditions in the foregoing paragraphs and Graph 1.

Normal operation

During a call for heat on Zone 1 only, Zone 1 thermostat energises the boiler, which in turn energises Zone 1 pump from terminal L2.

During a call for heat on other zones the appropriate relay directs power to L1 to energise the boiler, at the same time ensuring that Zone 1 pump is controlled by Zone 1 thermostat.

Water circulation system - refer to page 5

18 ZONES WITH SPRING-RETURN MOTORISED VALVES

IMPORTANT

Terminal L2 may control the appropriate pump(s) directly, provided that the total running or starting current does not exceed 6A (resistive or inductive): if this rating would be exceeded then appropriate switchgear must be used to control the pumps indirectly.

Three zones are illustrated but the principles may be extended as required, provided the above conditions are met. Only one relay is required, irrespective of the number of zones.

Overrun
During overrun and dormant periods, Zone Valve 1 is held open. This zone, therefore, MUST satisfy the conditions in the foregoing paragraphs and Graph 1.

Normal operation
During a call for heat on Zone 1 only, the boiler energises via Zone 1 thermostat and the normally closed contacts of the relay.

During a call for heat on other zone(s), the relay will be energised by the auxiliary switch on the zone valves. This provides power to energise the boiler. If, in addition, Zone 1 now calls for heat, its thermostat will open Zone 1 valve via the normally open contacts of the relay.

Schematic Wiring

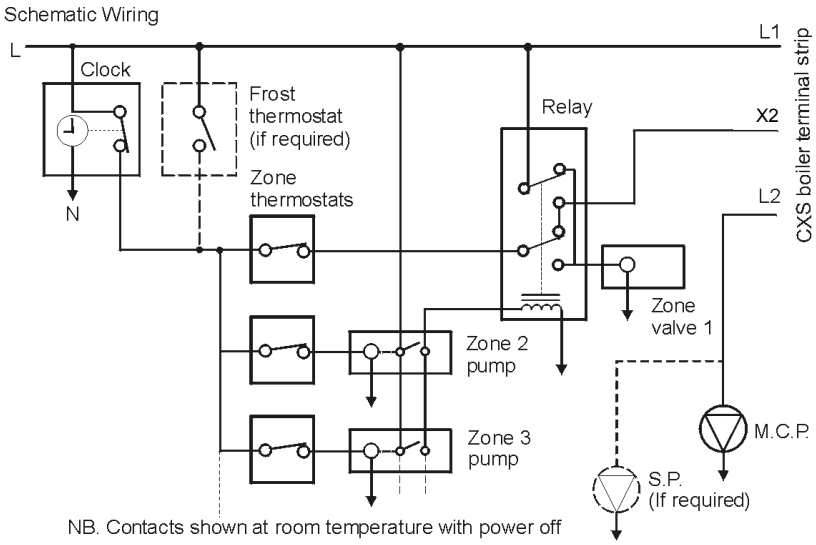

Pipework

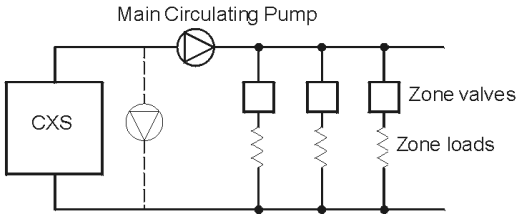

When the clock period ends, Zone valve 1 will (stay) open via normally closed relay contacts to achieve pump overrun.

Water circulation system - refer to page 5

19 COMMISSIONING AND TESTING

GENERAL

Check that all drain cocks are closed, that any stop valves fitted to the flow and return pipes are open and that the system has been filled and properly vented.

PURGING

Check that the electricity supply is switched OFF.

Remove the casing lower front panel.

Extinguish all naked lights and open all doors and windows. DO NOT SMOKE. Check that the gas supply is turned ON at the meter and open the main gas inlet cock. Loosen the union and allow air to be purged from the gas line until gas is smelled. Refer to BS 6891 or IGE-UP-1 for further details. Retighten the union .

TESTING FOR GAS SOUNDNESS

Close the gas supply cock at the meter.

Remove the screw in the inlet pressure test point, Frames 20/21, and connect a gas pressure gauge to the test point. Take particular care to ensure a gas-tight connection. Open the gas supply cock at the meter and the appliance gas cock; record the static pressure. Next, close the gas supply cock at the meter. Wait for 1 minute for temperature stabilisation then observe the pressure gauge over a period of 2 minutes.

Any leaks must be cured.

Replace all pressure test point screws.

20 INITIAL LIGHTING

1. Check that the boiler thermostat knob (1) on the control box (2) is OFF.
2. Ensure that the mains gas inlet cock (3) is open (groove in the square head in line with the gas pipe).
3. Press in and release the overheat thermostat button (4).
4. Switch on the electrical supply to the boiler.
5. Ensure that all system controls (time switch, system controls etc.) are calling for heat.
6. Turn the boiler thermostat knob (1) to position 6.
7. The boiler will light at Low rate and the Boiler-on light (5) will be illuminated. If it does not light the Lockout light (6) will be illuminated. Press in and release the Lockout button (7). The controls will reset and attempt to relight.
8. The burner will remain at Low rate for about 3 minutes before going to High rate.
9. Check all connections for gas soundness, using leak detection fluid.
10. Set the boiler thermostat knob and the system controls to the required settings.
11. Turn off the electrical supply to the boiler.

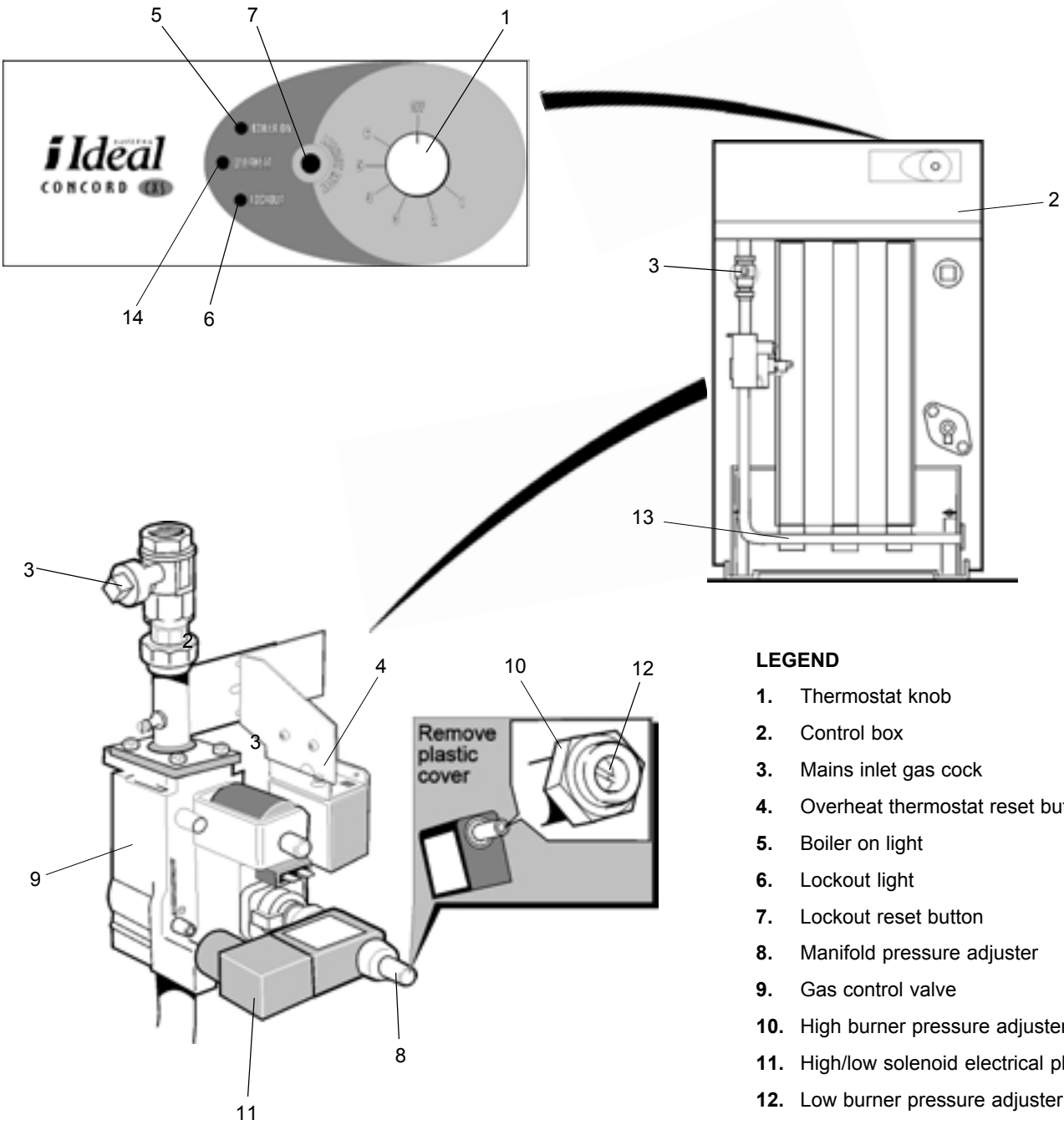

LEGEND

1. Thermostat knob
2. Control box
3. Mains inlet gas cock
4. Overheat thermostat reset button
5. Boiler on light
6. Lockout light
7. Lockout reset button
8. Manifold pressure adjuster
9. Gas control valve
10. High burner pressure adjuster
11. High/low solenoid electrical plug
12. Low burner pressure adjuster
13. Manifold pressure test point
14. Overheat light

CXS 40 - 90 boilers shown

21 MANIFOLD GAS PRESSURE

The manifold setting pressure must now be checked and adjusted as necessary. *It is essential to set the High Pressure first*

Start the adjustment procedure with the system cold, on full load and with all temperature controls set to maximum to avoid thermostatic shutdown. Remove the screw in the manifold setting pressure test point and connect a suitable gas pressure gauge.

Turn on the electrical supply to light the boiler and let it operate for about 10 minutes to stabilise the burners. Check the pressure and if it differs noticeably from that given in Table 1 for the appropriate boiler size adjust it as follows:

CXS 40 - 90 Boilers.
Refer to Frame 20 illustration. (*Numbers in brackets in this 40-90 section also refer to Frame 20)*.

The location of the manifold pressure adjuster (8) on the gas valve is shown in Frame 20. Prise off the plastic cover on the gas valve (9) and, using a suitable spanner, set the High burner pressure adjuster (10) to the value given in Table 1.

Undo the screw retaining the electrical plug (11) on the High/Low solenoid on the gas valve and pull it out.

Using a screwdriver turn the screw within the spindle to set the Low burner pressure adjuster (12) to the value given in Table 1.

Refit the electrical plugs and the dust and plastic covers.

CXS 100 boilers

The setting procedure must be done in 2 steps. The location of the manifold pressure adjusters (1 & 2) on the gas valve is shown below. Undo the screw holding the lower electrical plug on the LH gas valve and pull it off. Prise off the plastic cover on the High/Low solenoid (3) on the RH valve and, using a suitable spanner, set the burner pressure adjuster (4) to the value given in Table 8. Refit the electrical plug and secure with the screw.

Remove the dust cover from the adjuster (1) on the LH gas valve and set the pressure to the value given in Table 8.

Now set the Low burner pressure by unscrewing and removing the lower electrical plug from the LH gas valve and High/Low plug from the RH gas valve. Using a screwdriver, turn the screw (6) within the spindle on the RH valve to set the Low burner pressure to the value given in Table 8.

Refit the electrical plugs and the dust and plastic covers.

Failure to follow this procedure may result in the correct burner pressure being set *but* the 2 gas valve governors *not* working correctly.

CXS 110 - 120 Boilers

The setting procedure must be done in 2 steps.

The location of the manifold pressure adjusters (1 & 2) on the gas valves are shown below. Remove the dust cover and using a screwdriver screw in the adjuster (1) on the LH gas valve nearly fully.

Prise off the plastic cover on the High/Low solenoid (3) on the RH valve and using a suitable spanner set the burner pressure adjuster (4) to the value given in Table 8 below. Then unscrew the adjuster (1) on the LH valve until the burner pressure falls and then reset it to the value given in the Table 8.

Now set the Low burner pressure by unscrewing and removing the lower electrical plug from the LH gas valve and the High/Low plug from the RH gas valve. Using a screwdriver turn the screw (6) within the spindle on the RH valve to set the burner pressure to the value given in Table 8 below.

Refit the electrical plugs, the dust cover and the plastic cover.

Failure to follow this procedure may result in the burner pressure being set *but* the 2 gas valve governors *not* working correctly.

Table 8 Manifold gas pressure settings

Boiler	RH valve adjustment pressure - mbar	LH valve and Final adjustment pressure - mbar	Low rate pressure - mbar
CXS 100	11.0	11.5	4.1
CXS 110	12.3	11.8	4.3
CXS 120	12.5	12.0	4.5

At the end of the adjustment procedure ensure that all covers are replaced, disconnect the gas pressure gauge and replace the blanking screw in the manifold pressure test point.

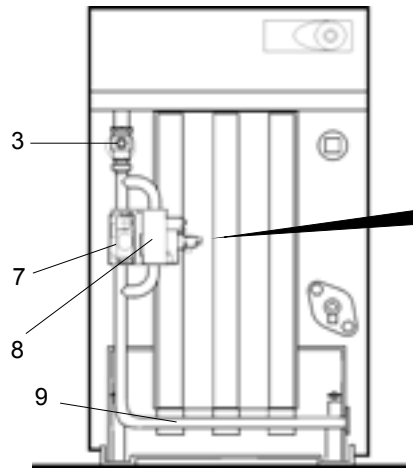

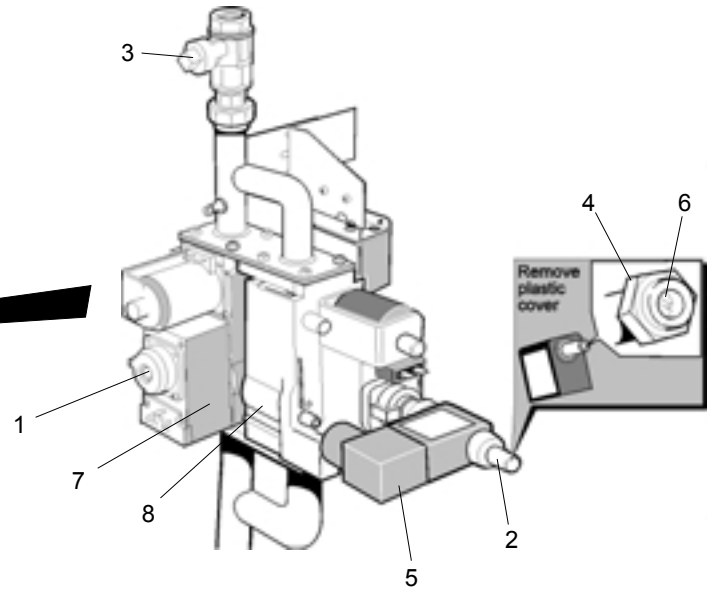

LEGEND

1. Manifold pressure adjuster (LH valve).
2. Manifold pressure adjuster (RH valve)
3. Main gas inlet cock
4. High burner pressure adjuster (RH valve).
5. High/low solenoid connector.
6. Low burner pressure adjuster (RH valve).
7. Left hand gas control valve.
8. Right hand gas control valve.
9. Manifold pressure test point

22 SPILLAGE CHECK

Check there is no spillage of combustion products from the boiler draught diverter by carrying out a spillage test, as detailed in BS. 5440:1.

23 TESTING

Check the main burner responds correctly to manual on/off operations of any controls fitted in the gas control circuit.

Check the operation of the flame failure safety system by lighting the boiler and then turning the gas inlet cock off.

The Burner On light will go out and the controls will try to relight the boiler. After a period of about 5 seconds, the Lockout light will be illuminated.

Turn on the gas cock again and press in and release the Lockout button. The boiler will relight.

24 ADJUSTMENT OF WATER FLOW RATE THROUGH THE BOILER

When commissioning the heating/domestic hot water system the shunt pump must be adjusted to give the minimum flow rate given in Table 3, when that part of the system intended to be used for dissipation of residual heat only is in operation.

25 HANDING OVER

ROUTINE OPERATION

Full instructions covering routine lighting and operation of the boiler are given on the Lighting and Operation Instruction Label located on the inside of the casing door.

Draw the attention of the boiler owner or his representative to the Lighting and Operating Instruction Label on the inside of the casing door. Give a practical demonstration of the lighting and shutting down of the boiler.

Describe the function of the boiler and system controls and show how they are adjusted and used.

Describe the function of the downdraught thermostat if fitted.

Hand over these and the User's Instructions to the customer and request him to keep them in a safe place for ready reference.

IMPORTANT. Point out to the owner that the boiler must have regular maintenance and cleaning, at least annually, in order to ensure reliable and efficient operation. Regular attention will also prolong the life of the boiler and should preferably be performed at the end of the heating season.

Recommend that a contract for this work should be made with a CORGI registered engineer.

26 SERVICING

Caradon Plumbing Limited does not accept any liability resulting from the use of unauthorised parts or the repair and servicing of appliances not carried out in accordance with the Company's recommendations and specifications.

A comprehensive service should be carried out at least once a year. The User is advised to make a contract with a CORGI registered engineer.

WARNING. ALWAYS turn *OFF* the gas supply at the gas cock and switch *OFF* and disconnect the electricity supply to the appliance BEFORE SERVICING OR REPLACING ANY COMPONENTS.

CLEANING THE BOILER

Pull and lift off the lower front panel and top panel from the boiler casing.

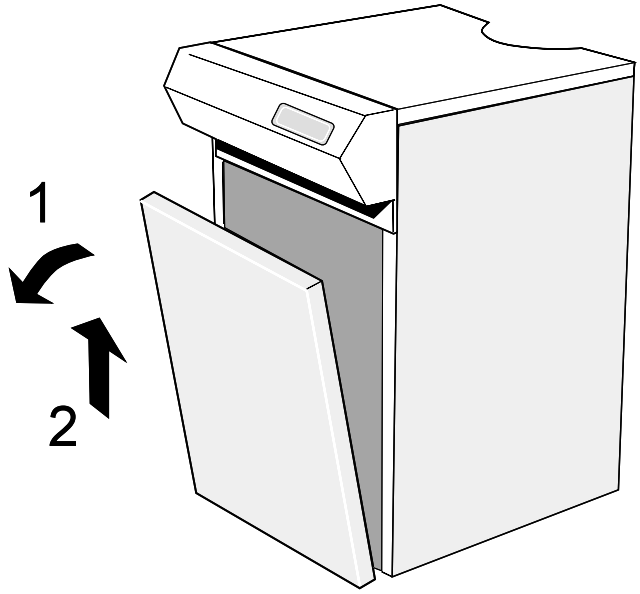

27 SERVICING - continued

Unscrew the extended nuts at the top of the NOx duct behind the control box and lift the NOx duct clear of the burners as illustrated below.

Undo the wing nuts securing the burner front plate. Pull the front plate forwards, at the top, and lift it out, *taking care not to damage the insulation or the detection electrode*.

On the **CXS 40, 50 & 60** remove the screws holding the HT heat shield from the LH leg of the combustion chamber. Raise slightly and withdraw the heat shield, *taking care not to damage the leads.*

The burners may be lifted out after they have been pushed back to clear the injectors. Take care not to damage the ignition electrode assembly and carefully detach the ignition leads when removing the left hand burner. Take care not to damage the detection electrode when removing the RH burner.
Undo the screws securing the cleanout cover and lift it off to give access to the flueways.
Lift out the flue baffles (*not fitted to the CXS 110 & 120).*

Remove all loose deposits from the heat exchanger (especially from between the fins), using the brush provided, and remove all debris from the combustion chamber floor.

Examine the burner assembly. Clean the burner bars by brushing them down with a stiff bristle (not wire) brush. Check each bar carefully to ensure that all flame ports are clear, that there are no cracks and that all surfaces are free from accumulated deposits.

If available, an industrial vacuum cleaner may be useful to assist in this work. When cleaning the burner bars, take care to avoid damage from rough handling to the ignition or detection electrodes.

Inspect the ignition and detection electrodes.

Ensure that they are clean and in good condition.
In particular, check that:

1. The ignition electrode shield and base fixing screws are tight.
2. The electrodes are correctly positioned. Refer to Frames 31 or 32.
3. Reassemble in reverse order. Refit the flue baffles, cleanout cover, NOx duct, and casing panels.

TESTING AFTER SERVICING

After re-assembly, restore the electricity and gas supplies. Light the boiler. Refer to the Lighting Instructions and also Frame 19 'Testing for Gas Soundness' .

Check burner manifold pressures (Frame 21) and adjust if necessary (Frame 21).

Finally, reset any external controls to the desired position.

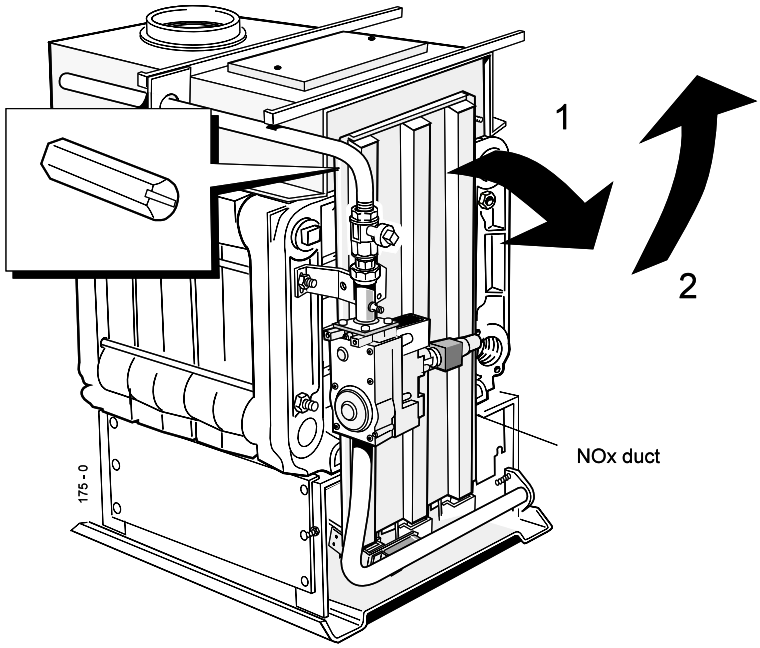

28 REPLACEMENT OF COMPONENTS - Refer to Frames 5, 31, 32 and 33.

GENERAL

WARNING

ALWAYS turn OFF the gas supply at the gas inlet cock and DISCONNECT the electricity supply BEFORE WORKING on the APPLIANCE.

To facilitate the replacement of components, remove and replace the lower front panel, NOx duct and the burner front plate as necessary - described under 'Servicing'.

29 GAS CONTROL VALVE

1. Disconnect the electrical connections to the faulty gas valve.
2. Turn the gas inlet cock OFF and unscrew the 4 screws on the outlet flange then unscrew the 4 screws on the inlet flange.

   CXS 90 -120 only - loosen the other 4 screws on the inlet flange securing the other gas valve.
3. Fit the new valve and reassemble in the reverse order, ensuring that the arrow on the back of the valve points in the direction of the gas flow and that new 'O' ring seals are correctly placed in each flange connection.
4. Test for gas soundness.
5. Recommission the appliance and set the manifold pressures as described in Frames 22 and 23 or 24.

30 MAIN BURNER

1. Remove the NOx duct and burner front plate, as previously described in Frame 26.
2. On the **CXS 40, 50 & 60** remove the screws holding the HT heat shield from the LH leg of the combustion chamber. Raise slightly and withdraw the heat shield, taking care not to damage the leads.
3. Each burner can be removed by sliding back, to clear the injector, then lifting out. Disconnect the ignition leads from the LH burner and the detection lead from the RH burner.
4. Remove the 2 screws securing the electrode assembly and heat shield to the LH burner bracket and the 2 screws securing the detection electrode bracket to the RH burner.
5. Reassemble in reverse order.

IMPORTANT. Care must be taken to prevent damage to the combustion chamber insulation when replacing burners.

31 BURNER AND CONTROLS ASSEMBLY - Exploded View - CXS 40 - 90

LEGEND

1. Main gas inlet cock.
2. Gas inlet union.
3. Gas control valve.
4. 'O' ring seal.
5. Spark generator.
6. Burner manifold.
7. Main injector, 3 off.
8. Main burner (centre/RH), 2 off.
9. Main burner (LH), 1 off.
10. Ignition electrodes.
11. Overheat thermostat generator mounting bracket.
12. Overheat thermostat.
13. Detection electrode assembly.
14. HT leads heat shield.
15. Gas pipe.

PTP Pressure test point.

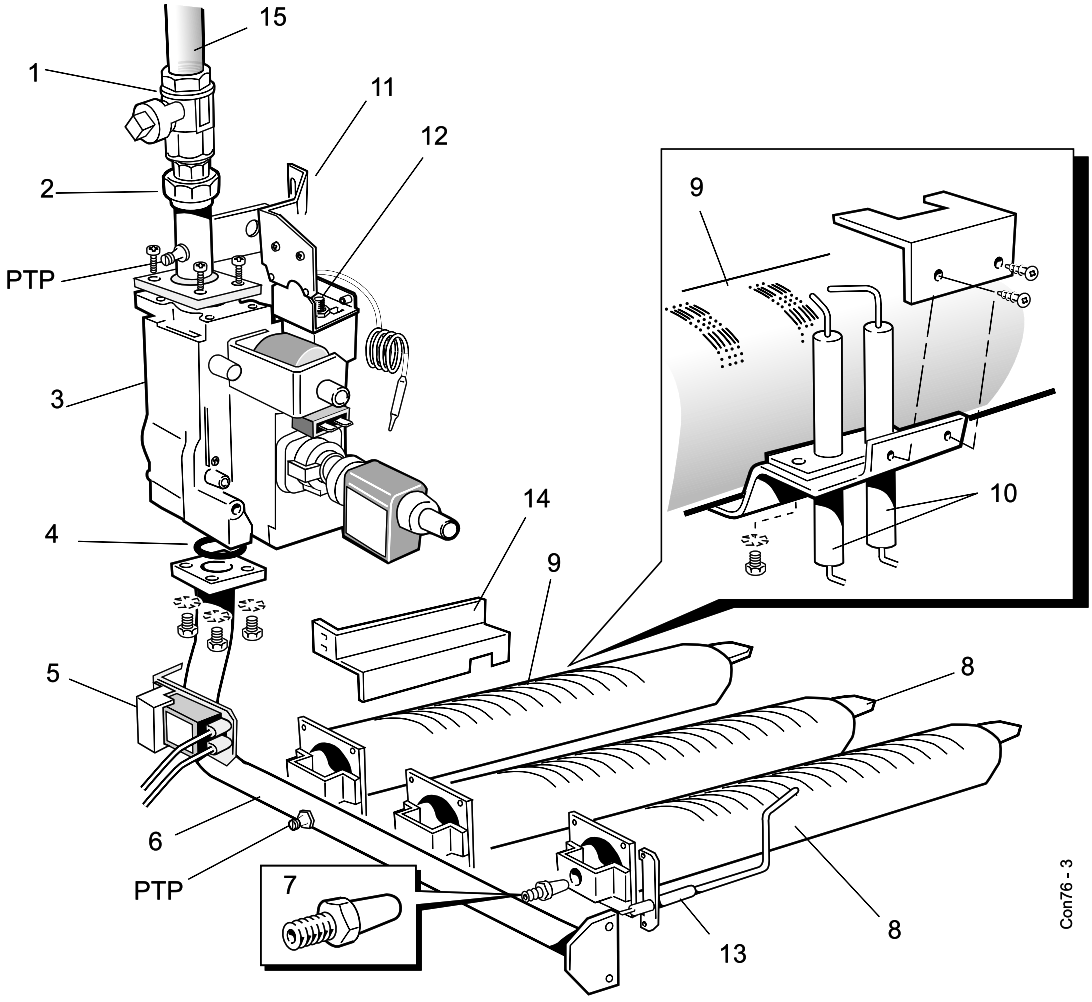

32 BURNER AND CONTROLS ASSEMBLY - Exploded View - CXS 100 - 120

LEGEND

1. Main gas inlet cock.
2. Gas inlet union.
3. 'O' ring seals.
4. Gas control valve
5. Gas control valve
6. Spark generator
7. Burner manifold.
8. Main injector, 3 off.
9. Main (centre/RH) burner, 2 off.
10. Main (LH) burner, 1 off.
11. Ignition electrodes.
12. Overheat thermostat mounting bracket.
13. Overheat thermostat.
14. Detection electrode assembly.
PTP Pressure test point

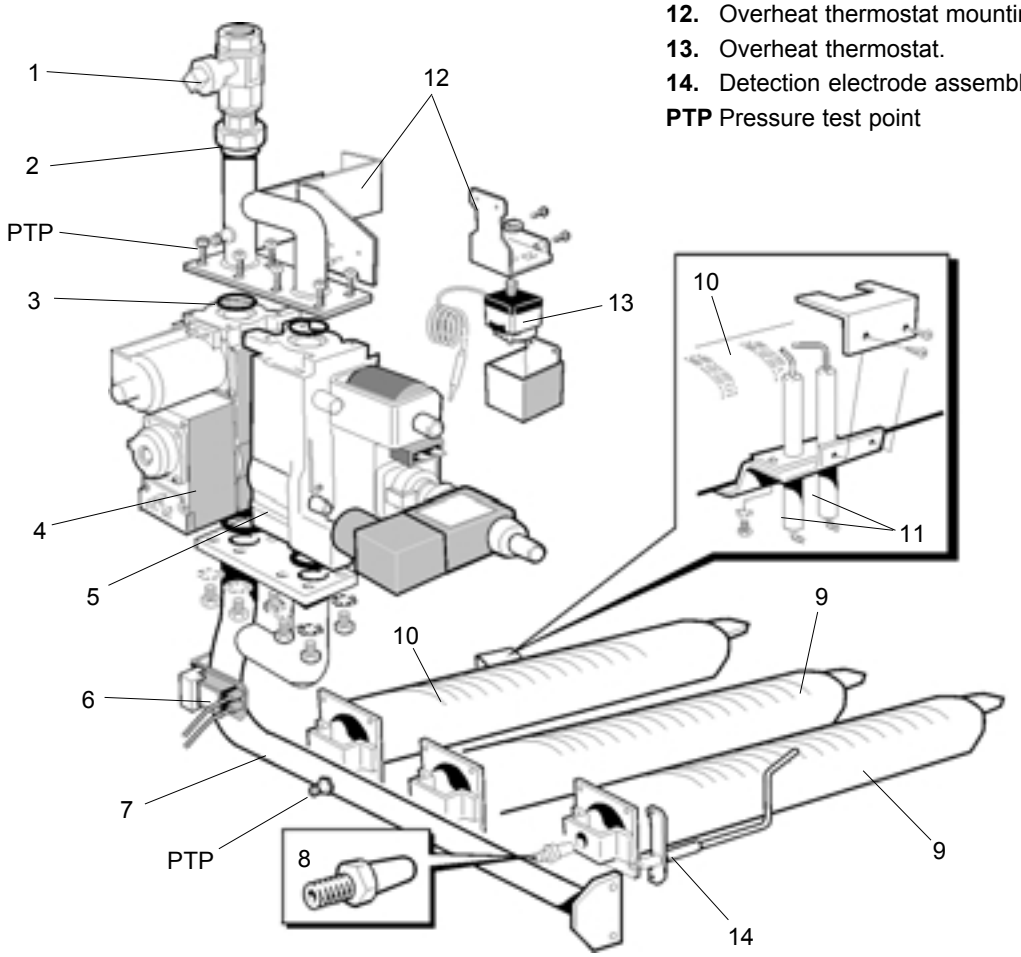

33 OVERHEAT THERMOSTAT

1. Remove the split pin from the overheat thermostat pocket and remove the phial.

2. Undo the 2 - M3 screws and remove the thermostat assembly from its fixing bracket.

3. Undo the backnut and the 2 - M3 screws and remove the top bracket.

4. Remove the wires and reconnect them to the new thermostat body as follows:

1. pink 2. white 3. red.

Reconnect the earth terminal

5. Reassemble in reverse order, ensuring that the thermostat connections are facing front before fitting the top bracket and that the capillary goes through the slot in the top panel.

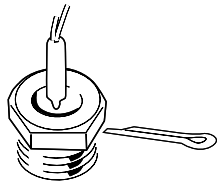

Con 1294-1

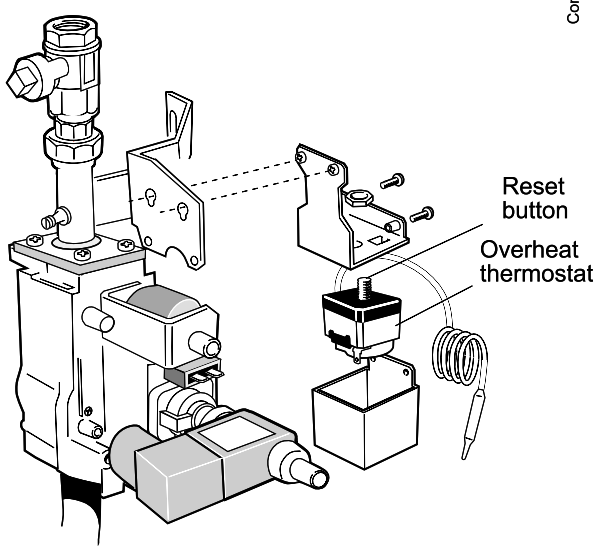

34 CONTROL BOX - Basic Boiler, Exploded View

Printed circuit board support detail

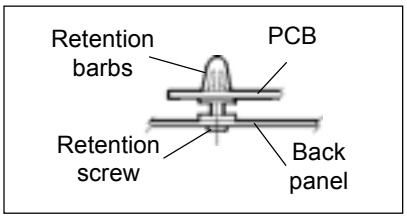

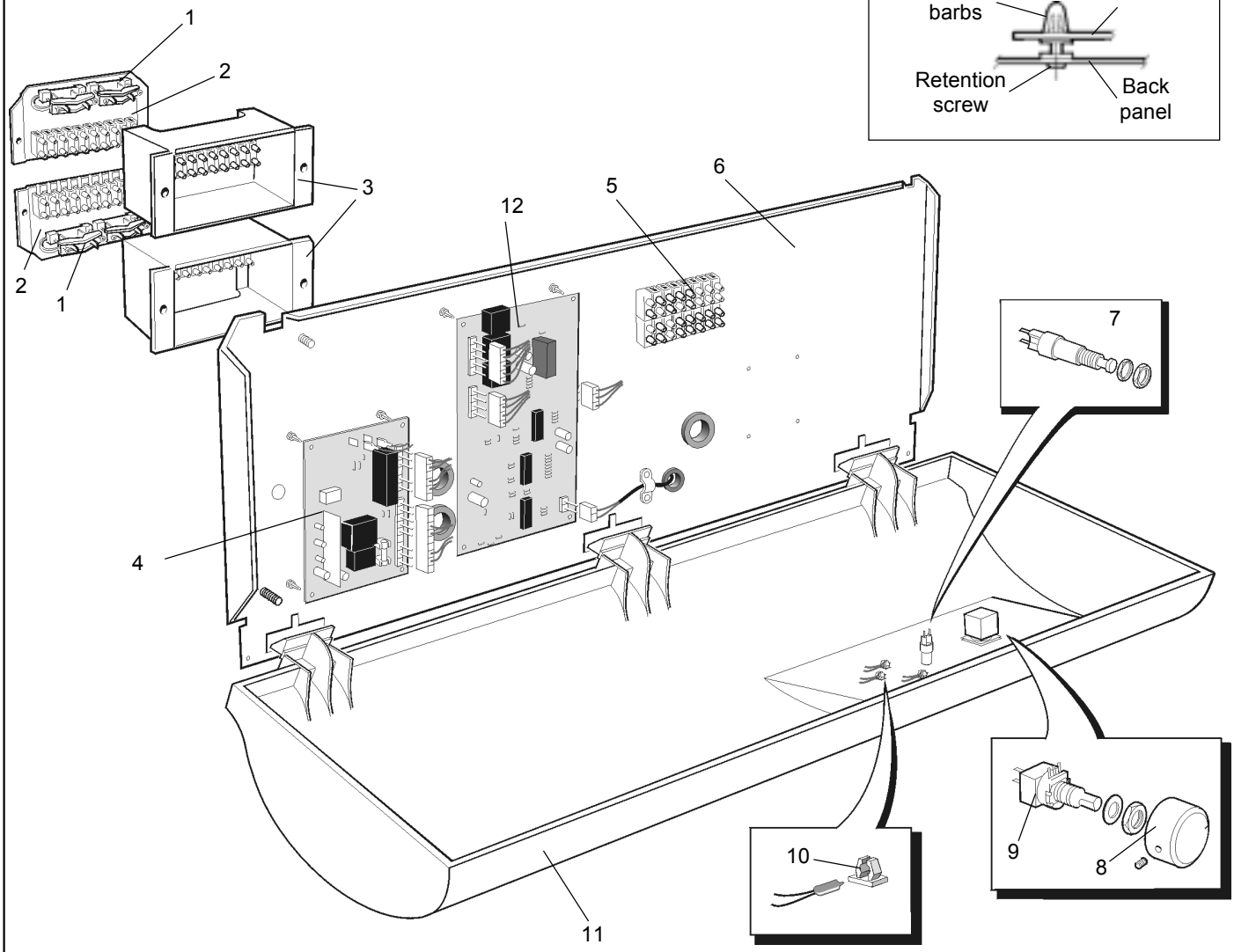

LEGEND

1. Wiring clamp.
2. Connection box plug.
3. Connection box.
4. PCB S456B1047
5. Terminal strip
6. Back panel
7. Lockout reset button
8. Thermostat knob
9. Potentiometer
10. Warning light lens
11. Controls box
12. PCB W 4115A1020

35 CONTROL SENSOR

1. Remove the casing top panel and lower front panel.
2. Remove the sensor from the thermostat pocket in the rear heat exchanger section by removing the Heyco bush.
3. Undo the 2 screws securing the control box front panel. Carefully lift up and lower it .
4. Pull out the sensor plug from the PCB and remove the strain relief bush. Remove the sensor and lead
5. Fit the new sensor in reverse order, ensuring that the lead is routed along the casing in the clips provided.

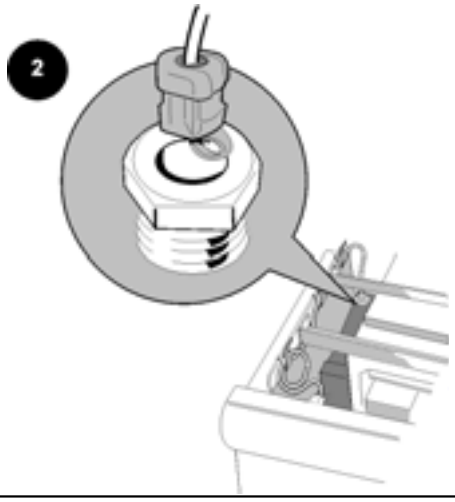

35A CONTROL SENSOR POTENTIOMETER ASSEMBLY

1. Undo the thermostat knob retaining screw and pull off the knob.
2. Remove the lower front panel.
3. Undo the backnut and washer retaining the potentiometer.
4. Undo the 2 screws securing the control box front panel, lift it and carefully lower it.
5. Pull off the connections at the back of the potentiometer and the plug from the PCB.
6. Fit the new potentiometer and reassemble in reverse order, ensuring that the connections on the back of the potentiometer are made either to the top 2 or the bottom 2 tags and that the lug on the potentiometer body locates through the hole in the front panel of the control box.

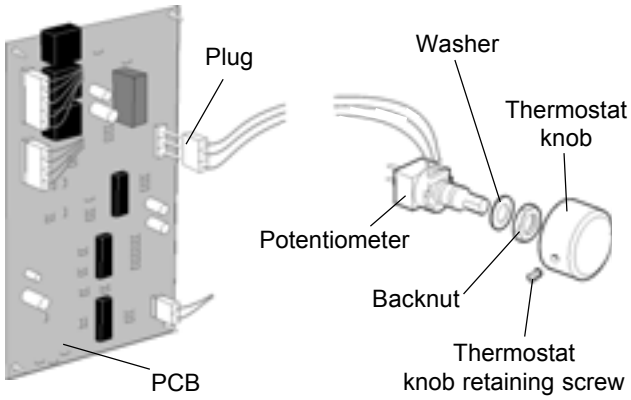

36 PC BOARD S4561B1047

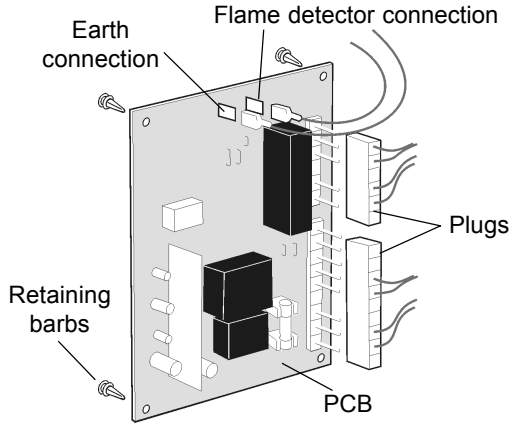

1. Remove the lower front panel.
2. Undo the 2 screws securing the control box front panel. Carefully lift it up and lower it down.
3. Pull off the 2 plugs and the 2 push-on connections from the board. The board can now be removed by squeezing in the retaining barbs.
4. Fit the new board and reassemble in reverse order, ensuring that the push-on connections are correctly fitted, as follows (from left to right): Earth - flame detector lead.

37 PC BOARD W4115A1020

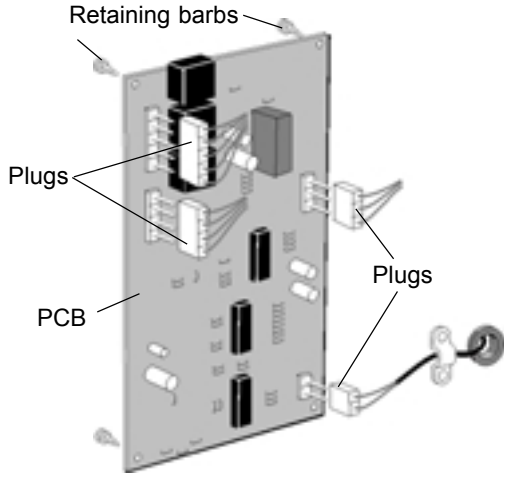

1. Remove the lower front panel.
2. Undo the 2 screws securing the control box front panel. Carefully lift it up and lower it .
3. Remove the 4 plugs from the board. The board can now be removed by squeezing in the retaining barbs.
4. Reassemble in reverse order.

38 COMBUSTION CHAMBER INSULATION REPLACEMENT

The insulation boards used in the combustion chambers of these products contain man-made fibres, refractory fillers, organic and inorganic binders and as such are deemed to be harmless to humans.

Caradon Plumbing Limited, however, recommend that for your own comfort and to comply with good working practise the procedure described below is followed.

IMPORTANT. Turn OFF the gas and **DISCONNECT** the electricity supply.

To replace the insulation boards the major boiler components (including the heat exchanger and burners) have to be removed to gain access to the combustion chamber.

Prior to removal of the boards the following protective equipment should be worn:

- Face mask supplied with the spare part.
- Gloves supplied with the spare part.

1 Damp down the combustion chamber area containing the insulation boards.

2. Remove the insulation boards. The replacement boards are supplied in a plastic bag. This bag should be retained and the discarded boards should now be placed into it.
3. Sweep any dampened particles and place in the plastic bag.
4. Fit new insulation boards.
5. Remove the gloves and face mask and place them in the plastic bag.
6. Wash your hands and any areas of skin which may have come into contact with any of the particles from the insulation board.
7. Seal the plastic bag and dispose of it and its contents into a commercial tip.

39 INSTRUCTIONS FOR SITE ASSEMBLED BOILERS

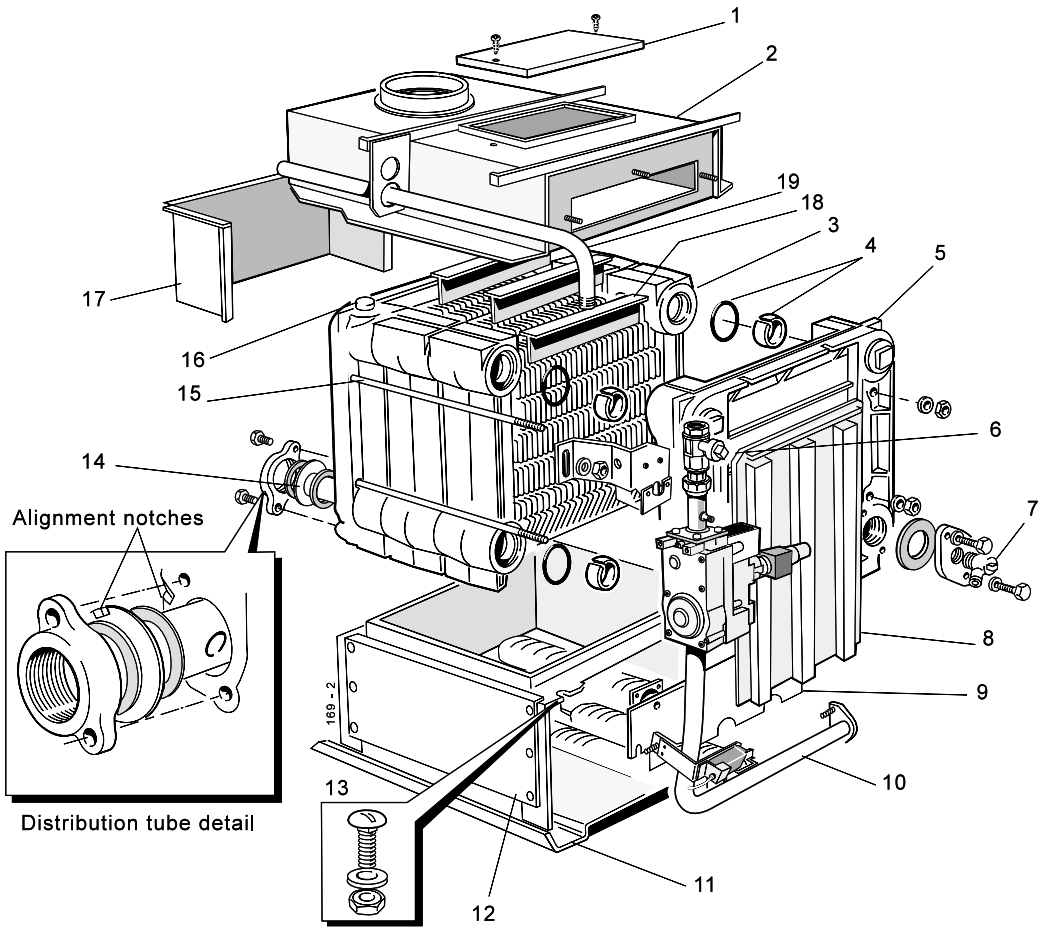

Legend

1. Cleanout cover.
2. Collector hood.
3. Middle section.
4. Section alignment rings & 'O' rings.
5. End section.
6. Gas cock.
7. Drain cock.
8. NOx duct.
9. Front plate.
10. Burner manifold assy.
11. Base plate.
12. Combustion chamber.
13. Section bolt.
14. Distribution tube.
15. Tie rods.
16. Thermostat pocket.
17. Spillage skirt.
18. Flueway baffles.
19. Gas pipe.

The site assembled boiler is supplied in the following packages:

- Combustion chamber / manifold / burner assembly.
- Platework package.
- Casing package.
- Controls box package with instruction books.
- End and centre sections.

GENERAL

The installation of the boiler must be in accordance with the Gas Safety (Installation and Use) Regulations 1994, amendments 1996 or rules in force, building regulations, I.E.E. (BS.7671) regulations and the bye-laws of the local water undertaking. It should also be in accordance with the relevant British Standard Codes of Practice together with any relevant requirements of the local gas supplier and local authority.

TOOLS REQUIRED

- Spanners
- Torque wrench
- Pozi screwdriver
- Mallet

ASSEMBLY

The combustion chamber should be positioned as near as possible to the installation site.

IMPORTANT. It must be remembered that the boiler distribution tube has to be fitted into the rear return tapping of the assembled boiler before siting.

Prior to assembling the sections it will be necessary to remove the burner and controls assembly from the combustion chamber.

Remove the assembly as follows:

1. Undo the 4 wing nuts securing the burner front plate. Pull the front plate forwards from the top and lift it out.
2. On the **CXS 40, 50 & 60** remove the screws holding the HT heat shield from the LH leg of the combustion chamber. Raise slightly and withdraw the heat shield taking care not to damage the leads.
3. The burners may now be lifted out after they have been pushed back to clear the injector.
4. Disconnect the electrode leads and take care not to damage the electrode assemblies.
5. Undo the nut securing the manifold assembly to the combustion chamber, pull the manifold assembly to the right and lift out.

40 INSTRUCTIONS FOR SITE ASSEMBLED BOILERS - continued

PREPARATION OF SECTIONS

Each section should be brushed clean on all external surfaces and any debris which may have accumulated within the section should be removed via the bottom ports.

Section assembly - Refer to exploded view, Frame 39.

6. Take the back section (with 1/2" BSP. tappings in the top) and lift it onto the combustion chamber so that the combustion chamber back panel return is inside the section rear lip. Locate a slotted steel ring and an 'O' ring seal into each of the 4 ports. It will be necessary to squeeze the steel ring slightly to enable it to be pushed fully into the recess.

7. Lift a middle section onto the combustion chamber and carefully offer it up to the back section until it engages the projecting steel rings. It may be necessary to use a mallet and hardwood block to ensure that the steel rings are pushed fully into the recesses and that the sections are butted up to each other.

Note. *Until the final section is fitted and the tie rods fastened, the sections in the assembly are not fixed together therefore CARE MUST BE TAKEN TO PREVENT the installed section coming apart.*

8. Repeat the above procedure for all of the remaining sections until the assembly is complete.

9. Fit the 4 tie rods through the holes in the sides of the end sections and fit a flat steel washer, a shakeproof washer and a nut to both ends of each tie rod. Screw up all the nuts equally, in turn, and finally tighten them to a torque of 38-41 Nm (28-30 lb ft).

10. Fit the distributor tube assembly as described in Frame 8. Fit the drain cock (refer to exploded view, Frame 39).

11. On open vented systems a hydraulic test should be carried out at 1 1/2 times the design pressure given in Table 2 for a period of 30 minutes.

12. On a pressurised system the test should be at twice the design pressure for a period of 30 minutes.

13. Fit the 4 coach bolts into the lugs at the bottom of the front and rear sections. Secure with the nuts and washers provided.

14. Fit the flue baffles which are located between the fins (not fitted in the CXS 110 & 120 boilers).

15. Fit the collector hood. Ensure the underside returns running across the hood sit within the front and rear section flueways. Fasten down using the four M6 screws and nuts provided, through the front and rear fixing points.

16. Locate the fibreglass rope in rear section grooves to form a seal with the spillage skirts. Fit the spillage skirts onto the collector hood using the self tapping screws provided.

17. Refit the manifold assembly. Position the boiler insulation over the gas line tie bracket. Fasten the bolt securing the bracket to the front section before wrapping and securing insulation around the boiler body.

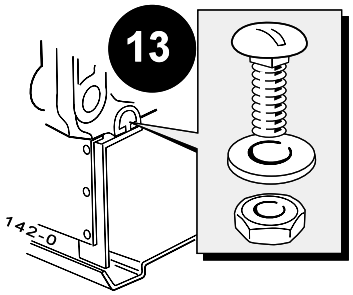

18. Insert the burner rear supports into the slots at the back of the combustion chamber. Lift the front of the burners over the injectors and pull forward to engage.

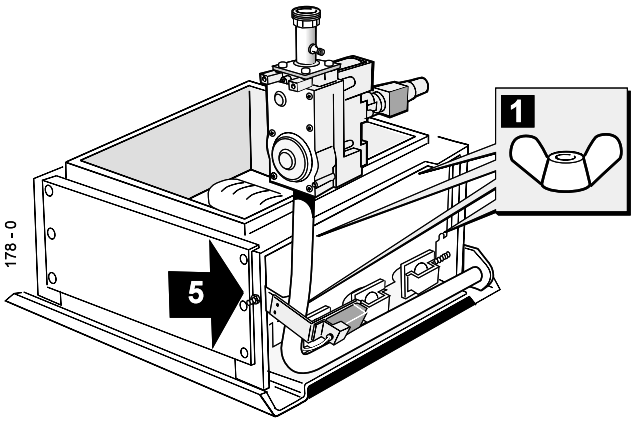

19. Fit the support angles (contained in the platework package) to the collector hood. The angle with the hole for the earth screw fits to the front.

20. Fit the gas inlet pipe bracket to the rear support angle on the LH side using the self tapping screws.

21. Fit the gas inlet pipe and make good the union between the gas cock and the valve inlet pipe.

22. Fit the Nox duct using the reverse procedure to that shown in Frame 27 and secure with the extended nuts.

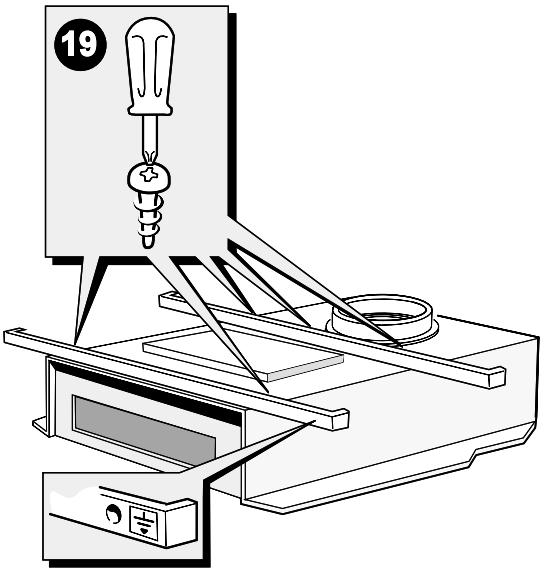

23. The boiler is now ready for installation. Go to Frame 8 and continue the installation from there.

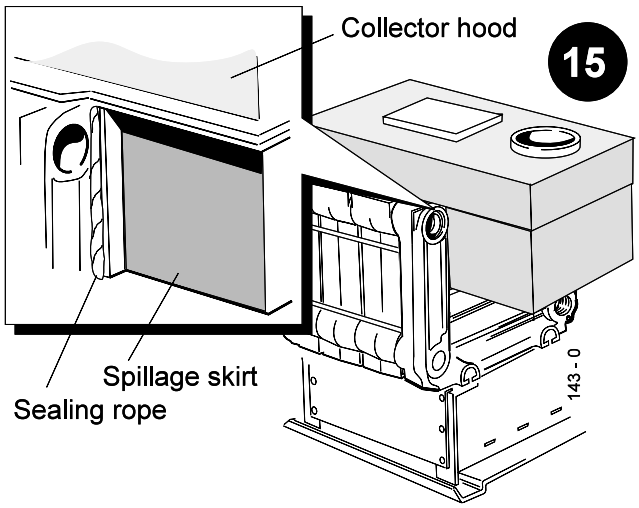

41 BOILER CONTROL

Before attempting any electrical fault finding ALWAYS carry out the preliminary electrical system checks as detailed in the Instructions for the British Gas Multimeter or other similar commercially available meter.

The preliminary electrical system checks are the FIRST electrical checks to be carried out during a fault finding procedure.

On completion of any service/fault finding task which has required the breaking and remaking of electrical connections the following checks MUST be repeated:

a. Earth continuity

b. Polarity

c. Resistance to earth

Detailed instructions on the replacement of faulty components are contained in the 'Servicing' section of these Installation & Servicing Instructions.

GENERAL INFORMATION

Anti-cycle will be in operation each time the boiler thermostat is satisfied and a rapid demand for heat is required. The same situation will occur if the external controls operate rapidly. This feature reduces component wear and ensures continuous trouble free operation. The anti-cycle duration is 4 minutes.

If the system pump, with a maximum current of 3A, is connected to the boiler pump terminals, pump overrun will be in operation when the demand for heat is satisfied, and will continue to run for 6 minutes.

Frost protection is inbuilt with the boiler. If the flow temperature falls to approximately 5 °C then the boiler will operate until the flow temperature exceeds 18 °C. Note that it is designed to protect the boiler and may not protect remote parts of the system. Neither the pump overrun nor the inbuilt frost protection will operate if the boiler thermostat is switched OFF.

The gas valves operate on High/Low and Off principle. The boiler will start at low rate and after 3 minutes the high rate gas valve will open. On reaching the set point, determined by the user, the boiler will go to low rate and when the temperature reaches the set point plus 3 °C the low rate gas valve will close. Should the temperature fall below the set point the boiler will go back to the high rate.

The full sequence control enables a single ignition attempt lasting about 5 seconds and will go to lockout if detection does not take place.

42 SIMPLE FLOW CHART OF OPERATION

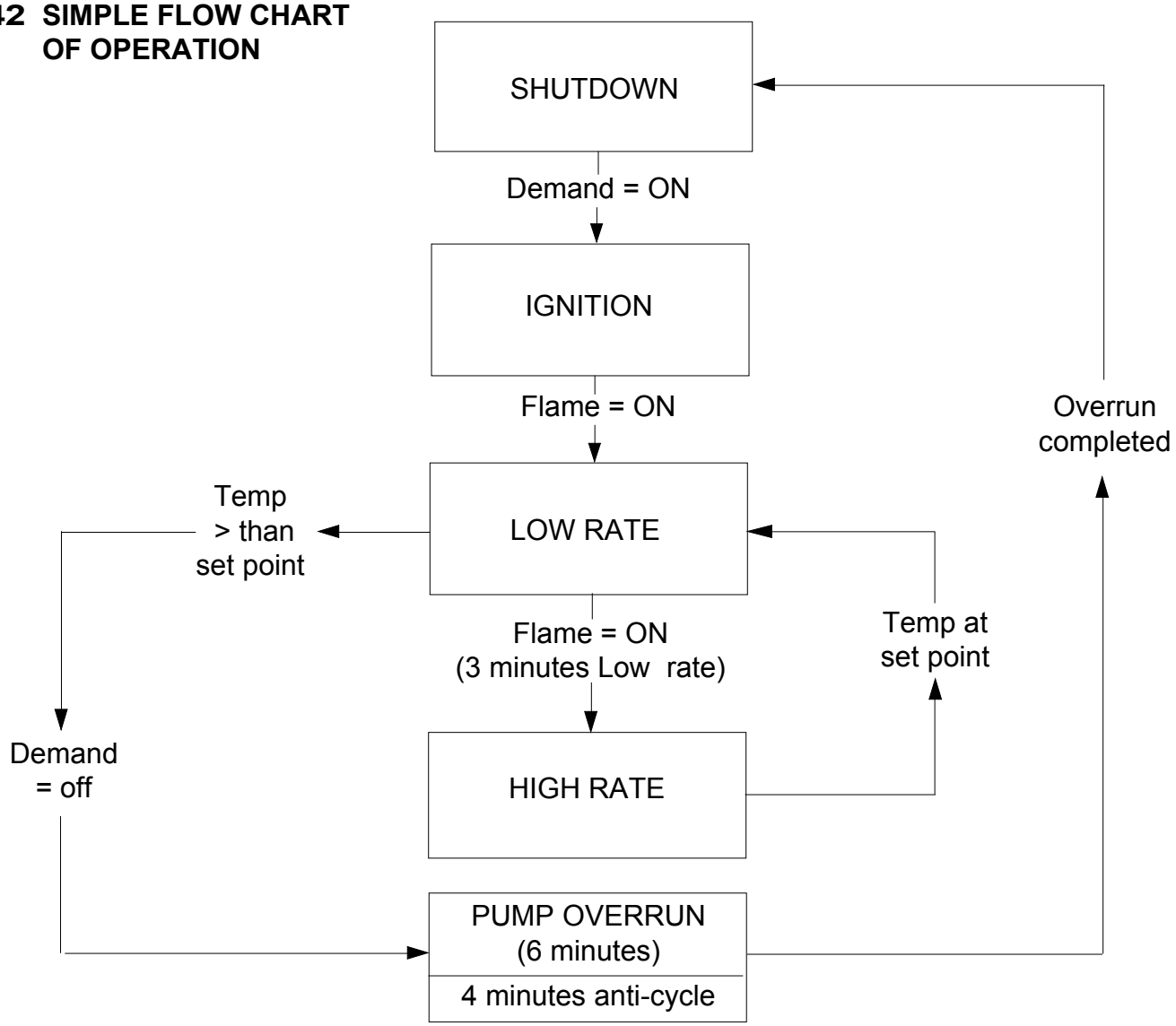

Before carrying out any Fault Finding, ensure that all internal controls are calling for heat and that the overheat thermostat has not operated. There should be 230V ± 10% available at the control box connection.

43 BOILER DOES NOT LIGHT

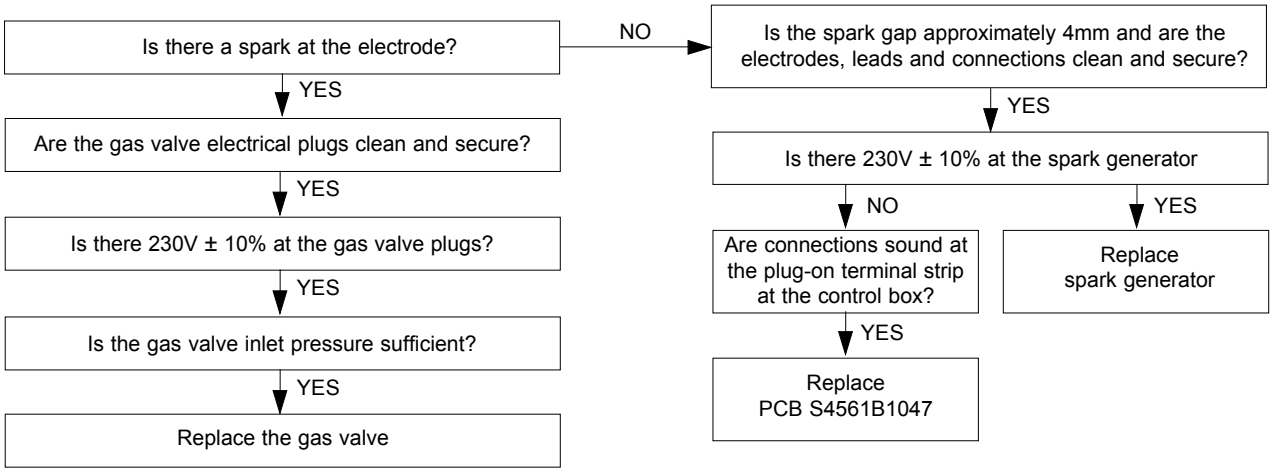

44 BOILER LIGHTS BUT GOES TO LOCKOUT

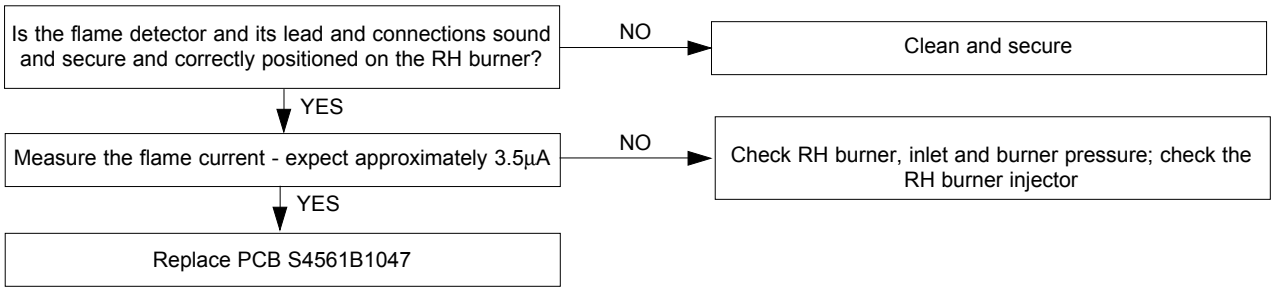

45 BOILER GOES OUT ON OVERHEAT THERMOSTAT

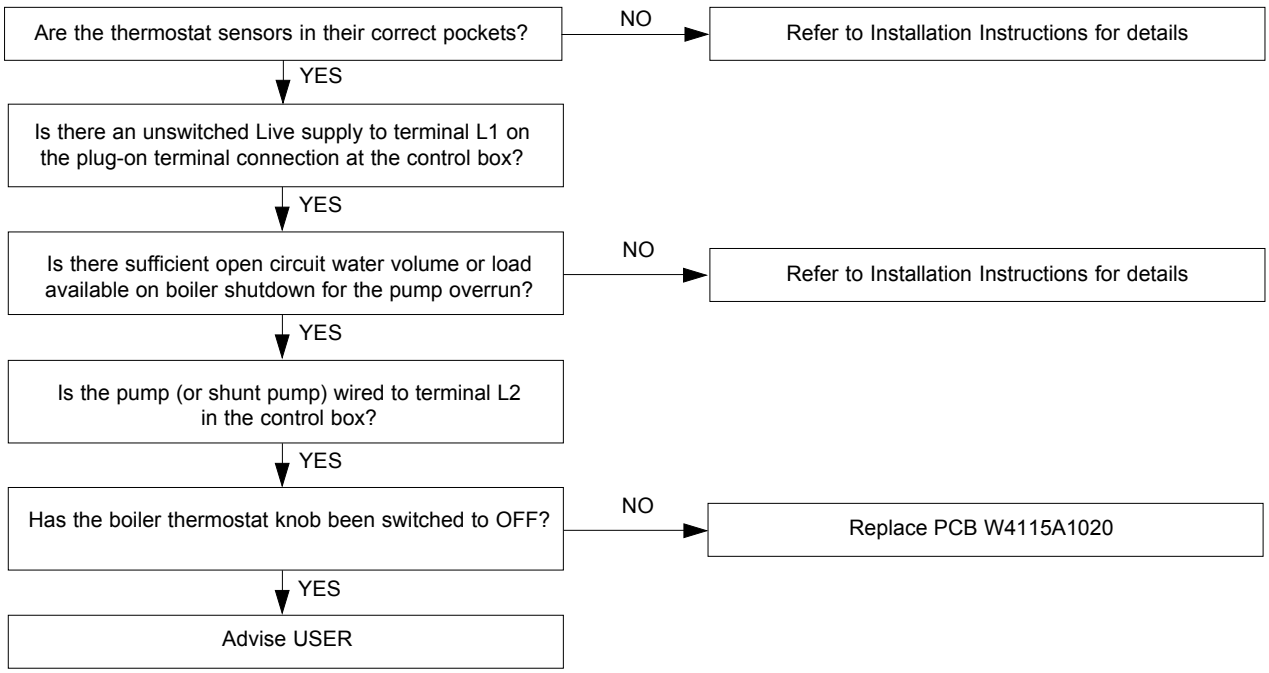

SHORT LIST OF PARTS

The following are parts commonly required as replacements due to damage or expendability. Their failure or absence is likely to affect the safety and/or performance of this appliance.

When ordering spare parts please quote:

1. Boiler model
2. Boiler serial no. (refer to data plate on the combustion chamber)
3. Boiler B.G. P.I. No. (refer to the data plate on the combustion chamber)
4. Description
5. Quantity
6. Product no.

Key No.	Description			Qty.	Product No.
12D	Boiler body insulation		CXS 40	1	150 093
			CXS 50/60	1	150 094
			CXS 70/80	1	150 095
			CXS 90/100/110	1	150 096
			CXS 120	1	154 856
23	Main burner	Worgas 0.087.751	CXS 40	1	150 153
		Worgas 0.087.753	CXS 50/60	1	150 154
		Worgas 0.087.755	CXS 70/80	1	150 155
		Worgas 0.087.757	CXS 90/100/110	1	150 156
		Worgas 0.087.761	CXS 120	1	154 812
24	Main burners	Worgas 0.087.750	CXS 40	2	150 149
		Worgas 0.087.752	CXS 50/60	2	150 150
		Worgas 0.087.754	CXS 70/80	2	150 151
		Worgas 0.087.756	CXS 90/100/110	2	150 152
		Worgas 0.087.760	CXS 120	2	154 811
26	Main burner injectors	Size 3.4 mm;	CXS 40	3	111 323
		Size 3.82mm;	CXS 50	3	111 324
		Size 4.12mm;	CXS 60	3	111 325
		Size 4.57mm;	CXS 70	3	111 326
		Size 4.86mm;	CXS 80	3	013 177
		Size 5.2mm;	CXS 90	3	111 328
		Size 5.3mm;	CXS100	3	013 179
		Size 5.6mm;	CXS110	3	154 840
		Size 5.8mm;	CXS120	3	154 841
29	Gas control valves				
	HONEYWELL VR4605PB 2003		CXS 40 - 120	1	111 867
	HONEYWELL VR4605AB 1019		CXS 100 - 120	1	111 869
29D	Gas control valve plug and lead assemblies		CXS 40 - 120	1	111 870
29E			CXS 40 - 120	1	154 734
29F			CXS 100 - 120	1	112 431
29G			CXS 100 - 120	1	139 269
29H					
30	Spark generator assembly (generator and terminals)			1	112 721
32	Ignition electrode BE/3417/SI			1	112 365
33	Flame detection electrode BE/3459/SI			1	112 364
37	Thermistor (Honeywell)			1	154 816
40	Overheat thermostat - Landis and Gyr Rak			1	
41	Control box assembly - complete			1	
42	Printed circuit board S4561B1047			1	154 814
43	Printed circuit board S4115A1020			1	154 815
44	Flame detector lead			1	
45	Boiler status neon - Boiler ON			1	154 854
	Boiler status neon - Overheat			1	154 855
	Boiler status neon - Lockout			1	
46	Lockout reset button assembly			1	004 346

SHORT LIST OF PARTS

Key No.	Description	Qty.	Product No.
48	RH casing side panel - white stove enamel ..... CXS 40	1	111 650
	..... CXS 50/60	1	111 651
	..... CXS 70/80	1	111 652
	..... CXS 90/100/110	1	111 653
	..... CXS 120	1	
49	LH casing side panel - white stove enamel ..... CXS 40	1	111 650
	..... CXS 50/60	1	111 651
	..... CXS 70/80	1	111 652
	..... CXS 90/100/110	1	111 653
	..... CXS 120	1	
50	Casing top panel - white stove enamel ..... CXS 40	1	111 293
	..... CXS 50	1	111 294
	..... CXS 60	1	111 295
	..... CXS 70	1	111 296
	..... CXS 80	1	111 297
	..... CXS 90/100	1	111 298
	..... CXS 110	1	
	..... CXS 120	1	
51	Casing lower front panel - white stove enamel c/w lighting instructions	1	
52	Casing upper front control panel (less controls) - white stove enamel	1	
53	Casing assembly, complete - white stove enamel ..... CXS 40	1	112 312
	..... CXS 50	1	112 313
	..... CXS 60	1	112 314
	..... CXS 70	1	112 315
	..... CXS 80	1	112 316
	..... CXS 90/100	1	112 317
	..... CXS 110	1	
	..... CXS 120	1	

Technical Training

The Caradon Plumbing Limited Technical Training Centre offers a series of first class training courses for domestic, commercial and industrial heating installers, engineers and system specifiers.

For details of courses please ring: *01482 498432*

Caradon Plumbing Limited pursues a policy of continuing improvement in the design and performance of its products. The right is therefore reserved to vary specification without notice.

July 2000 154 867 A02

CE

Ideal BOILERS

P.O. Box 103, National Ave, Kingston upon Hull, HU5 4JN. Telephone: 01482 492 251 Fax: 01482 448 858. Registration No. London 322 137. Registered Office: National Avenue, Kingston upon Hull, HU5 4JN. *A subsidiary of Caradon plc*

Ideal Installer/Technical Helpline: 01482 498376